ETHER NDE

The Eddy Current Probe & Accessories Catalogue

August 2021 - Version 7.7

Tel: +44 (0) 1727 648050
Email: sales@ethernde.com
Web: www.ethernde.com

Certificate Number 15820

Contents

Contents 2
Introduction 4
Ether NDE Instrument Probe Connector Details 6
WeldCheck – WeldCheck2 – WeldCheck+ - AeroCheck – AeroCheck2 - AeroCheck+: 6
ETi – High End Eddy Current Flaw Detector: 6
SigmaCheck – SigmaCheck2 Conductivity Meter: 6
EmbecEC - USB Embedded Eddy Current Solution: 7
Victor2.2D – Mains Powered Eddy Current Automated Inspection Instrument: 7
VeeScan Model H – Automated Eddy Current Wheel Inspection System: 8
Pencil Probes (Double Shielded) – Absolute/Bridge 9
Straight - Absolute with plastic handle coding: 10
Straight – Bridge (IB Tech Inside) with plastic handle coding: 11
90deg Tip - Absolute with plastic handle coding: 12
90deg Tip - Bridge (IB Tech Inside) with plastic handle coding: 15
45deg Crank – Absolute with plastic handle coding: 18
45deg Crank – Bridge (IB Tech Inside) with plastic handle coding: 19
15deg Crank 90deg Tip - Absolute with plastic handle coding: 20
15deg Crank 90deg Tip - Bridge (IB Tech Inside) with plastic handle coding: 23
Pencil Probe (Unshielded) - Absolute 26
Thread Inspection Probes (Unshielded) - Absolute 27
Pencil Type 27
Straight - External Threads (Bolts) 28
90deg Crank - External and Internal Threads (Bolts and Nuts) 29
65deg Crank – Internal Thread (Nuts) 29
Saddle and Plug - Thread Inspection Probes 30
Broad Band Probes – Absolute/Bridge 31
Rotating Probes - Reflection 33
Rigid Stainless Steel Coding 34
Delrin Flexible Coding 36
Manual Bolt Hole Probes - Absolute 37
Standard Weld Probes - Bridge 39
Disconnect Weld Probes - Bridge 41
Under Water Weld Probes - Bridge 42
High Temp Ceramic Tipped Weld Probes - Bridge 43
Stainless Steel Tipped Weld Probes - Bridge 43
Miniature Weld Probes - Bridge 44
Weld Probe Kits 45
Weld Probe Standard Kit to fit WeldCheck/AeroCheck Range: 45
Weld Probe Advanced Kit to fit WeldCheck/AeroCheck Range: 45
Internal Diameter (ID) Probes - Bridge 46
Spot Face Low Frequency Probes 51
Flat Surface Probes 53
Large Encircling Probes 54
Round Encircling Probes and Wear Guides 55
Square Encircling Probes and Wear Guides 56
Small Encircling Probes 58
VeeScan Probes – Bridge 59

Sliding Probes – Dual Element 60
Low Frequency Fastener Inspection Probes 61
Rail Inspection Probes 62
SigmaCheck Conductivity Probe 63
AeroCheck+ Conductivity Probe 64
Rotating Drive 65
Test Blocks 66
General Purpose with Slots 66
Weld Probe Test Block 66
Weld Probe Demo Crack Specimen 67
Rotating Probe Test Block 68
Rotating Probe Test Blocks – Multi Hole 69
Split Conical Calibration Blocks 70
Surface Probe Test Block 71
Bond-Testing Pitch-Cath Probe Delrin Coupon 71
Bond Testing Modified Boeing ST8871D Composite Test Block 72
Conductivity Test Blocks 73
Probe Leads 74
Probe Adapters 75
Probe Tape 76
Balance Loads 76
Probe and Instrument Cases 77
Probe Case: 77
Protective/Splash Proof Instrument Case: 77
Instrument Soft Carry Case: 78
Instrument Hard Carry Case: 78
Other Instrument Accessory's: 79
Probe Kits 80
Weld Probe Kit to fit WeldCheck/AeroCheck Range: 80
Weld Probe Advanced Kit to fit WeldCheck/AeroCheck Range: 80
Surface Probe Kit to fit WeldCheck/AeroCheck Range: 81
Sub Surface Probe Kit to fit WeldCheck/AeroCheck Range: 81
Rotary Drive Kit to fit AeroCheck – AeroCheck2 – AeroCheck+: 81
NIST Conductivity Probe Kit to fit WeldCheck+ – AeroCheck+: 82
NPL Conductivity Probe Kit to fit WeldCheck+ – AeroCheck+: 83
ETher NDE Eddy Current Product Range and Features Explained 84
Also Available 85
Special Probe Design Check List 86

Address:

ETher NDE,
Endeavour House,
Unit 18 Brick Knoll Park,
St Albans,
Hertfordshire,
AL1 5UG.
UK

Introduction

What does ETher NDE do?
We are a dedicated manufacturer of Eddy Current (ECT) non-destructive testing (NDT) equipment, probes and accessories and the 'go to' company for all your Eddy Current (EC) NDT solutions.

ETher NDE is based in St Albans, Hertfordshire, UK and has many distributors worldwide. If you would like to **learn more about NDT** and **learn more about Eddy current NDT**, then please go to our website www.ethernde.com.

Why do we do what we do?
ETher NDE believes that our customers deserve the best: the best Eddy Current equipment, the best Eddy Current probes, the best Eddy Current knowledge and the best service. We know that the Eddy Current NDT market is very specialised so we strive to give our customers the highest level of Eddy Current expertise.

You won't find us diverting away to the more common NDT methods any time soon so we really are the market leaders for Eddy Current NDT knowledge. We are determined to continuously make sure that, as well as offering Eddy Current NDT equipment and probes, we are on hand to help with application problems and challenges. Our team thrives on a challenge.

Where did ETher NDE start?
Mike Reilly and John Hansen founded ETher NDE Ltd on 1st January 2010.

Mike was previously Group Managing Director of Sonatest PLC from 1989 to 2009, during which time the group grew from a $2m to $25m business.

John was Senior Staff Engineer for Eddy Current NDT at GE Inspection Technologies, St Albans, UK (previously Hocking NDT).

John is the immediate past Chairman of the BINDT Trade Group as well as being a BINDT Council Member, BINDT UK Engineering Council Representative and ordinary member of various other committees and for ASTM he serves on the Electromagnetic and DICONDE Committees (where he is the Eddy Current Technical Contact).

John's Eddy Current NDT wealth of knowledge and passion is well regarded in the industry and this, teamed with Mike's overall NDT market expertise, has allowed ETher NDE to be built on a very solid foundation.

With a combined industry experience of nearly 70 years, Mike and John quickly built a team based on non---destructive testing knowledge, passion and skill.

Who is ETher NDE?

Many of the ETher NDE team members, including John Hansen, have worked together previously as part of Hocking. Collectively we have over 150 years of non-destructive testing experience making us a strong Eddy Current specialist team.

If you want honest answers from knowledgeable, down to earth Eddy Current NDT specialists then ETher NDE is the company for you. If you give us a call, you'll go straight to Karen, who alone is an absolute fountain of product knowledge. She'll be able to direct you to the right team member for your question. Within the ETher NDE offices we house the Hardware, Software, Applications, Probe Manufacturing, Electronics, Sales and Marketing teams so you will be sure to get the correct person for your needs.

Ultimately we like to keep it simple at ETher; the ability to speak to someone as soon as possible that can give knowledgeable answers to your questions.

What do we stand for? What can we offer you?

ETher NDE was founded on three core principles and to this day they are still what we operate in line with every day. They are:

1. **The ability to speak to someone who understands our product, the industry and your applications.**
2. **Industry leading delivery on equipment and probes and the ability to respond to your challenges.**
3. **Our products are second to none in both performance and quality.**

We are proud to offer Eddy Current NDT solutions to the industry backed up by a wealth of knowledge, with great customer service from real people who care and are passionate about what they do.

Ether NDE Instrument Probe Connector Details

All of the below instruments use the same industry standard Lemo Coaxial connector for Absolute probes and Lemo 12-Way connector for Bridge and Reflection probes.

WeldCheck – WeldCheck2 – WeldCheck+ - AeroCheck – AeroCheck2 - AeroCheck+:

Absolute probes
– Lemo Coaxial

Absolute, Bridge and
Reflection probes
– Lemo 12-Way

ETi – High End Eddy Current Flaw Detector:

Bridge and Reflection probes
– Lemo 12-Way

Absolute probes –
Lemo Coaxial

SigmaCheck – SigmaCheck2 Conductivity Meter:

This instrument uses a Lemo 5-Way connector for all conductivity probes.

EmbecEC - USB Embedded Eddy Current Solution:

This instrument uses a Lemo 7-Way connector for Bridge and Reflection probes.

Typical leads to fit above instrument:

Ether NDE Part No.	Description	Length	Configuration
ALL07-L04-015-EEC-B	Accessory, Lead, Lemo 7-Way - Lemo 4-Way, 1.5m, To fit EmbedEC (Bridge)	1.5m	Bridge
ALL07-L04-015-EEC-R	Accessory, Lead, Lemo 7-Way - Lemo 4-Way, 1.5m, To fit EmbedEC (Reflection)	1.5m	Reflection

Victor2.2D – Mains Powered Eddy Current Automated Inspection Instrument:

This instrument uses the industry standard Lemo Coaxial connector for Absolute probes and Lemo 12-Way connector for Bridge and Reflection probes

VeeScan Model H – Automated Eddy Current Wheel Inspection System:

This automated inspection systems uses a Lemo 4-Way connector on the wheel inspection probe and a Lemo 12-Way connector on the AeroCheck+ instrument.

Lead to fit above system:

Ether NDE Part No.	Description	Length	Configuration
ALL12R-L04-025B	Accessory, Lead, Lemo 12-Way (90 deg) - Lemo 4-Way, 2.5m (Bridge)	2.5m	Bridge

Pencil Probes (Double Shielded) – Absolute/Bridge

Straight with plastic handle

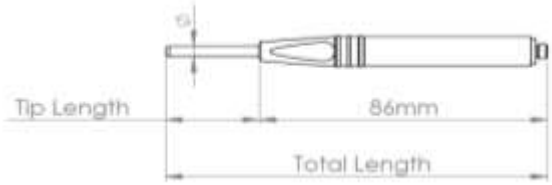

90deg Tip with plastic handle

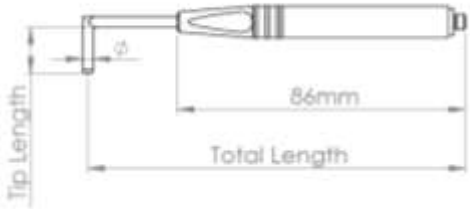

45deg Crank with plastic handle

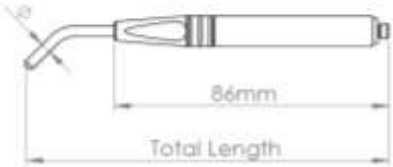

15deg Crank, 90deg Tip

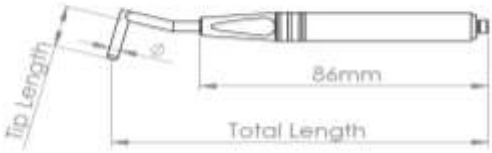

Application:

Absolute Pencil probes - for general purpose inspection of surface breaking defects and metallurgy variations, uses Micro connector.

Bridge Pencil probes – Ether NDE newly developed "IB Tech Inside " absolute intrinsically balanced technology which further improves the signal to noise ratio of conventional absolute probes giving a significant improvement in inspection reliability, uses Lemo 4-Way connector.

Specification:

- Double Shielded, used on Fe & NFe applications, Disconnectable
- Non Magnetic Stainless Steel Shanks - Straight, 90deg Tip, 45deg Crank, 15deg crank + 90deg Tip
- Plastic Handle with finger scallops and neoprene grip
- Connector – Micro for absolute and Lemo 4-Way for bridge (IB Tech Inside)
- Centre frequency/Operating range – 200kHz (50kHz – 600kHz), 500kHz (150kHz – 1.5MHz), 2MHz – (650kHz – 6MHz), 6MHz – (2MHz – 18MHz)

Straight - Absolute with plastic handle coding:

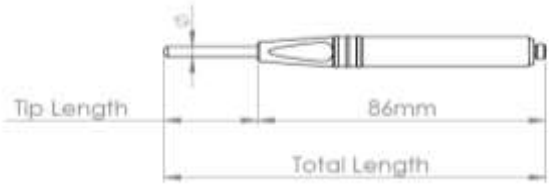

Micro Connector

Standard

Ether NDE Part No.	Centre Frequency	Tip Length (Total Length)	ØTip	Type
Probe, Shielded, Plastic Handle, Straight:				
PS200PS028-114N	200kHz	28mm Tip Length (Total Length 114mm, 4.5”) (Straight Shank)	4.45	Absolute
PS200PS028-114F	200kHz	28mm Tip Length (Total Length 114mm, 4.5”) (Straight Shank)	3.30 (Fine)	Absolute
PS500PS028-114N	500kHz	28mm Tip Length (Total Length 114mm, 4.5”) (Straight Shank)	4.45	Absolute
PS500PS028-114F	500kHz	28mm Tip Length (Total Length 114mm, 4.5”) (Straight Shank)	3.30 (Fine)	Absolute
PS002PS028-114N	2MHz	28mm Tip Length (Total Length 114mm, 4.5”) (Straight Shank)	3.30	Absolute
PS002PS028-114F	2MHz	28mm Tip Length (Total Length 114mm, 4.5”) (Straight Shank)	2.34 (Fine)	Absolute
PS006PS028-114N	6MHz	28mm Tip Length (Total Length 114mm, 4.5”) (Straight Shank)	2.34	Absolute
Please see matrix below for other options, specials available on request.				

Other

Straight Probe Example: **PS200PS028-114N**

	Centre Frequency	Handle	Tip Type	Tip Length (mm) - Total Length (mm)	Tip Diameter (mm)
PS	**200**	**P**	**S**	**028-114**	**N**
	200 = 200kHz	Plastic	Straight	**028-114** = Tip Length 28mm - Total Length 114mm (4.5")	**N** = Normal (200kHz = Dia 4.45mm)
	500 = 500kHz			**048-127** = Tip Length 48mm - Total Length 127mm (5.0")	**N** = Normal(500kHz = Dia 4.45mm)
	002 = 2MHz			**066-152** = Tip Length 66mm - Total Length 152mm (6.0")	**N** = Normal(2MHz = Dia 3.30mm)
	006 = 6MHz			**117-203** = Tip Length 117mm - Total Length 203mm (8.0")	**N** = (6MHz = Dia 2.34mm)
				168-254 = Tip Length 168mm - Total Length 254mm (10.0")	**F** = Fine(200k = Dia 3.30mm)
				219-305 = Tip Length 219mm - Total Length 305mm (12.0")	**F** = Fine(500kHz = Dia 3.30mm)
					F = Fine(2MHz = Dia 2.34mm)

Other variants available on request.

Leads to fit above probes:

Ether NDE Part No.	Description	Instrument	Connector Instrument End	Connector Probe End	Cable Length	Configuration
ALLCX-M02-015A	Lead	WeldCheck/AeroCheck/ Vantage/ETi	Lemo Coaxial	Micro Plug	1.5m	Absolute
ALL12-M02-015A	Lead	WeldCheck/AeroCheck/ Hocking	Lemo 12-Way	Micro Plug	1.5m	Absolute
ALL07-M02-015A	Lead	Hocking	Lemo 7-Way	Micro Plug	1.5m	Absolute
ALB02-M02-015A	Lead	Various	BNC Plug	Micro Plug	1.5m	Absolute

Straight – Bridge (IB Tech Inside) with plastic handle coding:

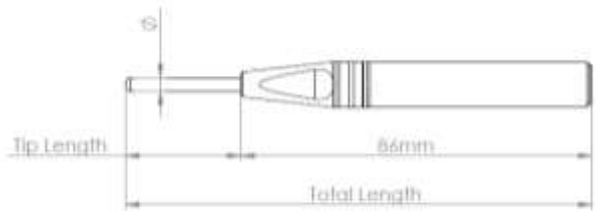

4-Way Lemo Connector

Standard

Ether NDE Part No.	Centre Frequency	Tip Length (Total Length)	∅Tip	Type
Probe, Shielded, Plastic Handle, Straight:				
PS200PS028-114NB	200kHz	28mm Tip Length (Total Length 114mm, 4.5”) (Straight Shank)	4.45	Bridge
PS200PS028-114FB	200kHz	28mm Tip Length (Total Length 114mm, 4.5”) (Straight Shank)	3.30 (Fine)	Bridge
PS500PS028-114NB	500kHz	28mm Tip Length (Total Length 114mm, 4.5”) (Straight Shank)	4.45	Bridge
PS500PS028-114FB	500kHz	28mm Tip Length (Total Length 114mm, 4.5”) (Straight Shank)	3.30 (Fine)	Bridge
PS002PS028-114NB	2MHz	28mm Tip Length (Total Length 114mm, 4.5”) (Straight Shank)	3.30	Bridge
PS002PS028-114FB	2MHz	28mm Tip Length (Total Length 114mm, 4.5”) (Straight Shank)	2.34 (Fine)	Bridge
PS006PS028-114NB	6MHz	28mm Tip Length (Total Length 114mm, 4.5”) (Straight Shank)	2.34	Bridge
Please see matrix below for other options, specials available on request.				

Other

Straight Probe Example: **PS200PS028-114NB**

	Centre Frequency	Handle	Tip Type	Tip Length (mm) - Total Length (mm)	Tip Diameter (mm)
PS	200	P	S	028-114	NB
	200 = 200kHz	Plastic	Straight	028-114 = Tip Length 28mm - Total Length 114mm (4.5")	NB = Normal (200kHz = Dia 4.45mm)
	500 = 500kHz			048-127 = Tip Length 48mm - Total Length 127mm (5.0")	NB = Normal (500kHz = Dia 4.45mm)
	002 = 2MHz			066-152 = Tip Length 66mm - Total Length 152mm (6.0")	NB = Normal(2MHz = Dia 3.30mm)
	006 = 6MHz			117-203 = Tip Length 117mm - Total Length 203mm (8.0")	NB = (6MHz = Dia 2.34mm)
				168-254 = Tip Length 168mm - Total Length 254mm (10.0")	FB = Fine(200k = Dia 3.30mm)
				219-305 = Tip Length 219mm - Total Length 305mm (12.0")	FB = Fine(500kHz = Dia 3.30mm)
					FB = Fine(2MHz = Dia 2.34mm)

Other variants available on request.

Leads to fit above probes:

Ether NDE Part No.	Description	Instrument	Connector Instrument End	Connector Probe End	Cable Length	Configuration
ALFTRI-L04-015	Lead	Victor/Veritor	Fischer Triax	Lemo 4-Way Plug	1.5m	Bridge
ALL12-L04-015B	Lead	WeldCheck/ AeroCheck/ Vantage/ETi	Lemo 12-Way	Lemo 4-Way Plug	1.5m	Bridge
ALL07-L04-015B	Lead	Hocking	Lemo 7-Way	Lemo 4-Way Plug	1.5m	Bridge

90deg Tip - Absolute with plastic handle coding:

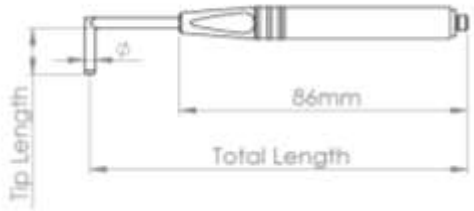

Standard

Ether NDE Part No.	Centre Frequency	Tip Length (Total Length)	∅Tip
Probe, Shielded, Plastic Handle, Right angled 90deg Tip:			
PS200PR050-114N	200kHz	5.0 (MIN) Tip Length (Total Length 114mm, 4.5”) (90deg Tip Shank)	4.45
PS200PR027-114F	200kHz	2.7 (MIN) Tip Length (Total Length 114mm, 4.5”) (90deg Tip Shank)	3.30 (Fine)
PS500PR050-114N	500kHz	5.0 (MIN) Tip Length (Total Length 114mm, 4.5”) (90deg Tip Shank)	4.45
PS500PR027-114F	500kHz	2.7 (MIN) Tip Length (Total Length 114mm, 4.5”) (90deg Tip Shank)	3.30 (Fine)
PS002PR027-114N	2MHz	2.7 (MIN) Tip Length (Total Length 114mm, 4.5”) (90deg Tip Shank)	3.30
PS002PR017-114F	2MHz	1.7 (MIN) Tip Length (Total Length 114mm, 4.5”) (90deg Tip Shank)	2.34 (Fine)
PS006PR017-114N	6MHz	1.7 (MIN) Tip Length (Total Length 114mm, 4.5”) (90deg Tip Shank)	2.34
Please see matrix below for other options, specials available on request.			

Other

90deg Tip Probe Example: **PS200PR050-114N**

	Centre Frequency	Handle	Tip Type	Tip Length (mm) - Total Length (mm)	Tip Diameter (mm)
PS	**200**	**P**	**R**	**050-114**	**N**
	200 = 200kHz	Plastic	Right	**050-114** = Tip Length 5mm - Total Length 114mm (4.5")	**N** = Normal (200kHz = Dia 4.45mm)
	500 = 500kHz		angled	**050-127** = Tip Length 5mm - Total Length 127mm (5.0")	**N** = Normal (500kHz = Dia 4.45mm)
			90deg	**050-152** = Tip Length 5mm - Total Length 152mm (6.0")	
			Tip	**050-203** = Tip Length 5mm - Total Length 203mm (8.0")	
				050-254 = Tip Length 5mm - Total Length 254mm (10.0")	
				050-305 = Tip Length 5mm - Total Length 305mm (12.0")	
				064-114 = Tip Length 6.4mm - Total Length 114mm (4.5")	
				064-127 = Tip Length 6.4mm - Total Length 127mm (5.0")	
				064-152 = Tip Length 6.4mm - Total Length 152mm (6.0")	
				064-203 = Tip Length 6.4mm - Total Length 203mm (8.0")	
				064-254 = Tip Length 6.4mm - Total Length 254mm (10.0")	
				064-305 = Tip Length 6.4mm - Total Length 305mm (12.0")	
				127-114 = Tip Length 12.7mm - Total Length 114mm (4.5")	
				127-127 = Tip Length 12.7mm - Total Length 127mm (5.0")	
				127-152 = Tip Length 12.7mm - Total Length 152mm (6.0")	
				127-203 = Tip Length 12.7mm - Total Length 203mm (8.0")	
				127-254 = Tip Length 12.7mm - Total Length 254mm (10.0")	
				127-305 = Tip Length 12.7mm - Total Length 305mm (12.0")	
				190-114 = Tip Length 19.0mm - Total Length 114mm (4.5")	
				190-127 = Tip Length 19.0mm - Total Length 127mm (5.0")	

Centre Frequency	Handle	Tip Type	Tip Length (mm) - Total Length (mm)	Tip Diameter (mm)
200 = 200kHz	Plastic	Right	190-152 = Tip Length 19.0mm - Total Length 152mm (6.0")	N = Normal (200kHz = Dia 4.45mm)
500 = 500kHz		angled	190-203 = Tip Length 19.0mm - Total Length 203mm (8.0")	N = Normal (500kHz = Dia 4.45mm)
		90deg	190-254 = Tip Length 19.0mm - Total Length 254mm (10.0")	
		Tip	190-305 = Tip Length 19.0mm - Total Length 305mm (12.0")	
			245-114 = Tip Length 25.4mm - Total Length 114mm (4.5")	
			254-127 = Tip Length 25.4mm - Total Length 127mm (5.0")	
			254-152 = Tip Length 25.4mm - Total Length 152mm (6.0")	
			254-203 = Tip Length 25.4mm - Total Length 203mm (8.0")	
			254-254 = Tip Length 25.4mm - Total Length 254mm (10.0")	
			254-305 = Tip Length 25.4mm - Total Length 305mm (12.0")	
200 = 200kHz	Plastic	Right	027-114 = Tip Length 2.7mm - Total Length 114mm (4.5")	F = Fine (200k = Dia 3.30mm)
500 = 500kHz		angled	027-127 = Tip Length 2.7mm - Total Length 127mm (5.0")	F = Fine (500kHz = Dia 3.30mm)
002 = 2MHz		90deg	027-152 = Tip Length 2.7mm - Total Length 152mm (6.0")	N = Normal (2MHz = Dia 3.30mm)
		Tip	027-203 = Tip Length 2.7mm - Total Length 203mm (8.0")	
			027-254 = Tip Length 2.7mm - Total Length 254mm (10.0")	
			027-305 = Tip Length 2.7mm - Total Length 305mm (12.0")	
			064-114 = Tip Length 6.4mm - Total Length 114mm (4.5")	
			064-127 = Tip Length 6.4mm - Total Length 127mm (5.0")	
			064-152 = Tip Length 6.4mm - Total Length 152mm (6.0")	
			064-203 = Tip Length 6.4mm - Total Length 203mm (8.0")	
			064-254 = Tip Length 6.4mm - Total Length 254mm (10.0")	
			064-305 = Tip Length 6.4mm - Total Length 305mm (12.0")	
			127-114 = Tip Length 12.7mm - Total Length 114mm (4.5")	
			127-127 = Tip Length 12.7mm - Total Length 127mm (5.0")	
			127-152 = Tip Length 12.7mm - Total Length 152mm (6.0")	
			127-203 = Tip Length 12.7mm - Total Length 203mm (8.0")	
			127-254 = Tip Length 12.7mm - Total Length 254mm (10.0")	
			127-305 = Tip Length 12.7mm - Total Length 305mm (12.0")	
			190-114 = Tip Length 19.0mm - Total Length 114mm (4.5")	
			190-127 = Tip Length 19.0mm - Total Length 127mm (5.0")	
			190-152 = Tip Length 19.0mm - Total Length 152mm (6.0")	
			190-203 = Tip Length 19.0mm - Total Length 203mm (8.0")	
			190-254 = Tip Length 19.0mm - Total Length 254mm (10.0")	
			190-305 = Tip Length 19.0mm - Total Length 305mm (12.0")	
			245-114 = Tip Length 25.4mm - Total Length 114mm (4.5")	
			254-127 = Tip Length 25.4mm - Total Length 127mm (5.0")	
			254-152 = Tip Length 25.4mm - Total Length 152mm (6.0")	
			254-203 = Tip Length 25.4mm - Total Length 203mm (8.0")	
			254-254 = Tip Length 25.4mm - Total Length 254mm (10.0")	
			254-305 = Tip Length 25.4mm - Total Length 305mm (12.0")	
002 = 2MHz	Plastic	Right	027-114 = Tip Length 2.7mm - Total Length 114mm (4.5")	F = Fine (2MHz = Dia 2.34mm)
006 = 6MHz		angled	027-127 = Tip Length 2.7mm - Total Length 127mm (5.0")	N = Normal (6MHz = Dia 2.34mm)
		90deg	027-152 = Tip Length 2.7mm - Total Length 152mm (6.0")	
		Tip	027-203 = Tip Length 2.7mm - Total Length 203mm (8.0")	
			027-254 = Tip Length 2.7mm - Total Length 254mm (10.0")	
			027-305 = Tip Length 2.7mm - Total Length 305mm (12.0")	

002 = 2MHz	Plastic	Right	064-114 = Tip Length 6.4mm - Total Length 114mm (4.5")	F = Fine (2MHz = Dia 2.34mm)
006 = 6MHz		angled	064-127 = Tip Length 6.4mm - Total Length 127mm (5.0")	N = Normal (6MHz = Dia 2.34mm)
		90deg	064-152 = Tip Length 6.4mm - Total Length 152mm (6.0")	
		Tip	064-203 = Tip Length 6.4mm - Total Length 203mm (8.0")	
			064-254 = Tip Length 6.4mm - Total Length 254mm (10.0")	
			064-305 = Tip Length 6.4mm - Total Length 305mm (12.0")	
			127-114 = Tip Length 12.7mm - Total Length 114mm (4.5")	
			127-127 = Tip Length 12.7mm - Total Length 127mm (5.0")	
			127-152 = Tip Length 12.7mm - Total Length 152mm (6.0")	
			127-203 = Tip Length 12.7mm - Total Length 203mm (8.0")	
			127-254 = Tip Length 12.7mm - Total Length 254mm (10.0")	
			127-305 = Tip Length 12.7mm - Total Length 305mm (12.0")	
			190-114 = Tip Length 19.0mm - Total Length 114mm (4.5")	
			190-127 = Tip Length 19.0mm - Total Length 127mm (5.0")	
			190-152 = Tip Length 19.0mm - Total Length 152mm (6.0")	
			190-203 = Tip Length 19.0mm - Total Length 203mm (8.0")	
			190-254 = Tip Length 19.0mm - Total Length 254mm (10.0")	
			190-305 = Tip Length 19.0mm - Total Length 305mm (12.0")	
			245-114 = Tip Length 25.4mm - Total Length 114mm (4.5")	
			254-127 = Tip Length 25.4mm - Total Length 127mm (5.0")	
			254-152 = Tip Length 25.4mm - Total Length 152mm (6.0")	
			254-203 = Tip Length 25.4mm - Total Length 203mm (8.0")	
			254-254 = Tip Length 25.4mm - Total Length 254mm (10.0")	
			254-305 = Tip Length 25.4mm - Total Length 305mm (12.0")	

Other variants available on request.

Leads to fit above probes:

Ether NDE Part No.	Description	Instrument	Connector Instrument End	Connector Probe End	Cable Length	Configuration
ALLCX-M02-015A	Lead	WeldCheck/ AeroCheck/ Vantage/ETi	Lemo Coaxial	Micro Plug	1.5m	Absolute
ALL12-M02-015A	Lead	WeldCheck/ AeroCheck/ Vantage/ETi/Hocking	Lemo 12-Way	Micro Plug	1.5m	Absolute
ALL07-M02-015A	Lead	Hocking	Lemo 7-Way	Micro Plug	1.5m	Absolute
ALB02-M02-015A	Lead	Various	BNC Plug	Micro Plug	1.5m	Absolute

90deg Tip - Bridge (IB Tech Inside) with plastic handle coding:

Standard

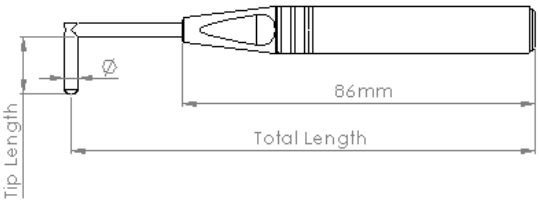

Ether NDE Part No.	Centre Frequency	Tip Length (Total Length)	ØTip
Probe, Shielded, Plastic Handle, Right angled 90deg Tip:			
PS200PR050-114NB	200kHz	5.0 (MIN) Tip Length (Total Length 114mm, 4.5”) (90deg Tip Shank)	4.45
PS200PR027-114FB	200kHz	2.7 (MIN) Tip Length (Total Length 114mm, 4.5”) (90deg Tip Shank)	3.30 (Fine)
PS500PR050-114NB	500kHz	5.0 (MIN) Tip Length (Total Length 114mm, 4.5”) (90deg Tip Shank)	4.45
PS500PR027-114FB	500kHz	2.7 (MIN) Tip Length (Total Length 114mm, 4.5”) (90deg Tip Shank)	3.30 (Fine)
PS002PR027-114NB	2MHz	2.7 (MIN) Tip Length (Total Length 114mm, 4.5”) (90deg Tip Shank)	3.30
PS002PR017-114FB	2MHz	1.7 (MIN) Tip Length (Total Length 114mm, 4.5”) (90deg Tip Shank)	2.34 (Fine)
PS006PR017-114NB	6MHz	1.7 (MIN) Tip Length (Total Length 114mm, 4.5”) (90deg Tip Shank)	2.34
Please see matrix below for other options, specials available on request.			

Other

90deg Tip Probe Example: **PS200PR050-114NB**

	Centre Frequency	Handle	Tip Type	Tip Length (mm) - Total Length (mm)	Tip Diameter (mm)
PS	**200**	**P**	**R**	**050-114**	**NB**
	200 = 200kHz	Plastic	Right	**050-114** = Tip Length 5mm - Total Length 114mm (4.5")	**NB** = Normal (200kHz = Dia 4.45mm)
	500 = 500kHz		angled	**050-127** = Tip Length 5mm - Total Length 127mm (5.0")	**NB** = Normal (500kHz = Dia 4.45mm)
			90deg	**050-152** = Tip Length 5mm - Total Length 152mm (6.0")	
			Tip	**050-203** = Tip Length 5mm - Total Length 203mm (8.0")	
				050-254 = Tip Length 5mm - Total Length 254mm (10.0")	
				050-305 = Tip Length 5mm - Total Length 305mm (12.0")	
				064-114 = Tip Length 6.4mm - Total Length 114mm (4.5")	
				064-127 = Tip Length 6.4mm - Total Length 127mm (5.0")	
				064-152 = Tip Length 6.4mm - Total Length 152mm (6.0")	
				064-203 = Tip Length 6.4mm - Total Length 203mm (8.0")	
				064-254 = Tip Length 6.4mm - Total Length 254mm (10.0")	
				064-305 = Tip Length 6.4mm - Total Length 305mm (12.0")	
				127-114 = Tip Length 12.7mm - Total Length 114mm (4.5")	
				127-127 = Tip Length 12.7mm - Total Length 127mm (5.0")	
				127-152 = Tip Length 12.7mm - Total Length 152mm (6.0")	
				127-203 = Tip Length 12.7mm - Total Length 203mm (8.0")	
				127-254 = Tip Length 12.7mm - Total Length 254mm (10.0")	
				127-305 = Tip Length 12.7mm - Total Length 305mm (12.0")	
				190-114 = Tip Length 19.0mm - Total Length 114mm (4.5")	
				190-127 = Tip Length 19.0mm - Total Length 127mm (5.0")	

Centre Frequency	Handle	Tip Type	Tip Length (mm) - Total Length (mm)	Tip Diameter (mm)
200 = 200kHz	Plastic	Right	190-152 = Tip Length 19.0mm - Total Length 152mm (6.0")	NB = Normal (200kHz = Dia 4.45mm)
500 = 500kHz		angled	190-203 = Tip Length 19.0mm - Total Length 203mm (8.0")	NB = Normal (500kHz = Dia 4.45mm)
		90deg	190-254 = Tip Length 19.0mm - Total Length 254mm (10.0")	
		Tip	190-305 = Tip Length 19.0mm - Total Length 305mm (12.0")	
			245-114 = Tip Length 25.4mm - Total Length 114mm (4.5")	
			254-127 = Tip Length 25.4mm - Total Length 127mm (5.0")	
			254-152 = Tip Length 25.4mm - Total Length 152mm (6.0")	
			254-203 = Tip Length 25.4mm - Total Length 203mm (8.0")	
			254-254 = Tip Length 25.4mm - Total Length 254mm (10.0")	
			254-305 = Tip Length 25.4mm - Total Length 305mm (12.0")	
200 = 200kHz	Plastic	Right	027-114 = Tip Length 2.7mm - Total Length 114mm (4.5")	FB = Fine (200k = Dia 3.30mm)
500 = 500kHz		angled	027-127 = Tip Length 2.7mm - Total Length 127mm (5.0")	FB = Fine (500kHz = Dia 3.30mm)
002 = 2MHz		90deg	027-152 = Tip Length 2.7mm - Total Length 152mm (6.0")	NB = Normal (2MHz = Dia 3.30mm)
		Tip	027-203 = Tip Length 2.7mm - Total Length 203mm (8.0")	
			027-254 = Tip Length 2.7mm - Total Length 254mm (10.0")	
			027-305 = Tip Length 2.7mm - Total Length 305mm (12.0")	
			064-114 = Tip Length 6.4mm - Total Length 114mm (4.5")	
			064-127 = Tip Length 6.4mm - Total Length 127mm (5.0")	
			064-152 = Tip Length 6.4mm - Total Length 152mm (6.0")	
			064-203 = Tip Length 6.4mm - Total Length 203mm (8.0")	
			064-254 = Tip Length 6.4mm - Total Length 254mm (10.0")	
			064-305 = Tip Length 6.4mm - Total Length 305mm (12.0")	
			127-114 = Tip Length 12.7mm - Total Length 114mm (4.5")	
			127-127 = Tip Length 12.7mm - Total Length 127mm (5.0")	
			127-152 = Tip Length 12.7mm - Total Length 152mm (6.0")	
			127-203 = Tip Length 12.7mm - Total Length 203mm (8.0")	
			127-254 = Tip Length 12.7mm - Total Length 254mm (10.0")	
			127-305 = Tip Length 12.7mm - Total Length 305mm (12.0")	
			190-114 = Tip Length 19.0mm - Total Length 114mm (4.5")	
			190-127 = Tip Length 19.0mm - Total Length 127mm (5.0")	
			190-152 = Tip Length 19.0mm - Total Length 152mm (6.0")	
			190-203 = Tip Length 19.0mm - Total Length 203mm (8.0")	
			190-254 = Tip Length 19.0mm - Total Length 254mm (10.0")	
			190-305 = Tip Length 19.0mm - Total Length 305mm (12.0")	
			245-114 = Tip Length 25.4mm - Total Length 114mm (4.5")	
			254-127 = Tip Length 25.4mm - Total Length 127mm (5.0")	
			254-152 = Tip Length 25.4mm - Total Length 152mm (6.0")	
			254-203 = Tip Length 25.4mm - Total Length 203mm (8.0")	
			254-254 = Tip Length 25.4mm - Total Length 254mm (10.0")	
			254-305 = Tip Length 25.4mm - Total Length 305mm (12.0")	
002 = 2MHz	Plastic	Right	027-114 = Tip Length 2.7mm - Total Length 114mm (4.5")	FB = Fine (2MHz = Dia 2.34mm)
006 = 6MHz		angled	027-127 = Tip Length 2.7mm - Total Length 127mm (5.0")	NB = Normal (6MHz = Dia 2.34mm)
		90deg	027-152 = Tip Length 2.7mm - Total Length 152mm (6.0")	
		Tip	027-203 = Tip Length 2.7mm - Total Length 203mm (8.0")	
			027-254 = Tip Length 2.7mm - Total Length 254mm (10.0")	
			027-305 = Tip Length 2.7mm - Total Length 305mm (12.0")	

002 = 2MHz	Plastic	Right	064-114 = Tip Length 6.4mm - Total Length 114mm (4.5")	FB = Fine (2MHz = Dia 2.34mm)
006 = 6MHz		angled	064-127 = Tip Length 6.4mm - Total Length 127mm (5.0")	NB = Normal (6MHz = Dia 2.34mm)
		90deg	064-152 = Tip Length 6.4mm - Total Length 152mm (6.0")	
		Tip	064-203 = Tip Length 6.4mm - Total Length 203mm (8.0")	
			064-254 = Tip Length 6.4mm - Total Length 254mm (10.0")	
			064-305 = Tip Length 6.4mm - Total Length 305mm (12.0")	
			127-114 = Tip Length 12.7mm - Total Length 114mm (4.5")	
			127-127 = Tip Length 12.7mm - Total Length 127mm (5.0")	
			127-152 = Tip Length 12.7mm - Total Length 152mm (6.0")	
			127-203 = Tip Length 12.7mm - Total Length 203mm (8.0")	
			127-254 = Tip Length 12.7mm - Total Length 254mm (10.0")	
			127-305 = Tip Length 12.7mm - Total Length 305mm (12.0")	
			190-114 = Tip Length 19.0mm - Total Length 114mm (4.5")	
			190-127 = Tip Length 19.0mm - Total Length 127mm (5.0")	
			190-152 = Tip Length 19.0mm - Total Length 152mm (6.0")	
			190-203 = Tip Length 19.0mm - Total Length 203mm (8.0")	
			190-254 = Tip Length 19.0mm - Total Length 254mm (10.0")	
			190-305 = Tip Length 19.0mm - Total Length 305mm (12.0")	
			245-114 = Tip Length 25.4mm - Total Length 114mm (4.5")	
			254-127 = Tip Length 25.4mm - Total Length 127mm (5.0")	
			254-152 = Tip Length 25.4mm - Total Length 152mm (6.0")	
			254-203 = Tip Length 25.4mm - Total Length 203mm (8.0")	
			254-254 = Tip Length 25.4mm - Total Length 254mm (10.0")	
			254-305 = Tip Length 25.4mm - Total Length 305mm (12.0")	

Other variants available on request.

Leads to fit above probes:

Ether NDE Part No.	Description	Instrument	Connector Instrument End	Connector Probe End	Cable Length	Configuration
ALFTRI-L04-015	Lead	Victor/Veritor	Fischer Triax	Lemo 4-Way Plug	1.5m	Bridge
ALL12-L04-015B	Lead	WeldCheck/ AeroCheck/ Vantage/ETi/Hocking	Lemo 12-Way	Lemo 4-Way Plug	1.5m	Bridge
ALL07-L04-015B	Lead	Hocking	Lemo 7-Way	Lemo 4-Way Plug	1.5m	Bridge

45deg Crank – Absolute with plastic handle coding:

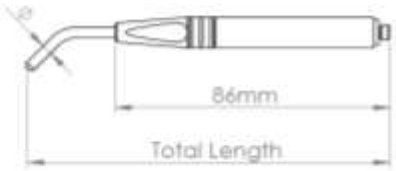

Standard

Ether NDE Part No.	Centre Frequency	Tip Length (Total Length)	ØTip	Type
Probe, Shielded, Plastic Handle, Crank:				
PS200PC195-114N	200kHz	19.5 (0.75”) Tip Length (Total Length 114mm, 4.5”) (45deg Crank Shank)	4.45	Absolute
PS200PC195-114F	200kHz	19.5 (0.75”) Tip Length (Total Length 114mm, 4.5”) (45deg Crank Shank)	3.30 (Fine)	Absolute
PS500PC195-114N	500kHz	19.5 (0.75”) Tip Length (Total Length 114mm, 4.5”) (45deg Crank Shank)	4.45	Absolute
PS500PC195-114F	500kHz	19.5 (0.75”) Tip Length (Total Length 114mm, 4.5”) (45deg Crank Shank)	3.30 (Fine)	Absolute
PS002PC195-114N	2MHz	19.5 (0.75”) Tip Length (Total Length 114mm, 4.5”) (45deg Crank Shank)	3.30	Absolute
PS002PC195-114F	2MHz	19.5 (0.75”) Tip Length (Total Length 114mm, 4.5”) (45deg Crank Shank)	2.34 (Fine)	Absolute
PS006PC195-114N	6MHz	19.5 (0.75”) Tip Length (Total Length 114mm, 4.5”) (45deg Crank Shank)	2.34	Absolute
Please see matrix below for other options, specials available on request.				

Other

45deg Crank Probe Example: **PS200PC195-114N**

	Centre Frequency	Handle	Tip Type	Tip Length (mm) - Total Length (mm)	Tip Diameter (mm)
PS	**200**	**P**	**C**	**195-114**	**N**
	200 = 200kHz	**P**lastic	**C**rank	**195-114** = Tip Length 19.5mm - Total Length 114mm (4.5")	**N** = Normal (200kHz = Dia 4.45mm)
	500 = 500kHz			**195-127** = Tip Length 19.5mm - Total Length 127mm (5.0")	**N** = Normal (500kHz = Dia 4.45mm)
	002 = 2MHz			**195-152** = Tip Length 19.5mm - Total Length 152mm (6.0")	**N** = Normal (2MHz = Dia 3.30mm)
	006 = 6MHz			**195-203** = Tip Length 19.5mm - Total Length 203mm (8.0")	**N** = Normal (6MHz = Dia 2.34mm)
				195-254 = Tip Length 19.5mm - Total Length 254mm (10.0")	**F** = Fine (200k = Dia 3.30mm)
				195-305 = Tip Length 19.5mm - Total Length 305mm (12.0")	**F** = Fine (500kHz = Dia 3.30mm)
					F = Fine (2MHz = Dia 2.34mm)

Other variants available on request.

Leads to fit above probes:

Ether NDE Part No.	Description	Instrument	Connector Instrument End	Connector Probe End	Cable Length	Configuration
ALLCX-M02-015A	Lead	WeldCheck/ AeroCheck/ Vantage/ETi	Lemo Coaxial	Micro Plug	1.5m	Absolute
ALL12-M02-015A	Lead	WeldCheck/ AeroCheck/ Vantage/ETi/Hocking	Lemo 12-Way	Micro Plug	1.5m	Absolute
ALL07-M02-015A	Lead	Hocking	Lemo 7-Way	Micro Plug	1.5m	Absolute
ALB02-M02-015A	Lead	Various	BNC Plug	Micro Plug	1.5m	Absolute

45deg Crank – Bridge (IB Tech Inside) with plastic handle coding:

Standard

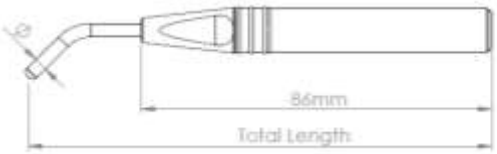

4-Way Lemo Connector

Ether NDE Part No.	Centre Frequency	Tip Length (Total Length)	ØTip	Type
Probe, Shielded, Plastic Handle, Crank:				
PS200PC195-114NB	200kHz	19.5 (0.75”) Tip Length (Total Length 114mm, 4.5”) (45deg Crank Shank)	4.45	Bridge
PS200PC195-114FB	200kHz	19.5 (0.75”) Tip Length (Total Length 114mm, 4.5”) (45deg Crank Shank)	3.30 (Fine)	Bridge
PS500PC195-114NB	500kHz	19.5 (0.75”) Tip Length (Total Length 114mm, 4.5”) (45deg Crank Shank)	4.45	Bridge
PS500PC195-114FB	500kHz	19.5 (0.75”) Tip Length (Total Length 114mm, 4.5”) (45deg Crank Shank)	3.30 (Fine)	Bridge
PS002PC195-114NB	2MHz	19.5 (0.75”) Tip Length (Total Length 114mm, 4.5”) (45deg Crank Shank)	3.30	Bridge
PS002PC195-114FB	2MHz	19.5 (0.75”) Tip Length (Total Length 114mm, 4.5”) (45deg Crank Shank)	2.34 (Fine)	Bridge
PS006PC195-114NB	6MHz	19.5 (0.75”) Tip Length (Total Length 114mm, 4.5”) (45deg Crank Shank)	2.34	Bridge
Please see matrix below for other options, specials available on request.				

Other

45deg Crank Probe Example: **PS200PC195-114NB**

	Centre Frequency	Handle	Tip Type	Tip Length (mm) - Total Length (mm)	Tip Diameter (mm)
PS	**200**	**P**	**C**	**195-114**	**NB**
	200 = 200kHz	**P**lastic	**C**rank	**195-114** = Tip Length 19.5mm - Total Length 114mm (4.5")	**NB** = Normal (200kHz = Dia 4.45mm)
	500 = 500kHz			**195-127** = Tip Length 19.5mm - Total Length 127mm (5.0")	**NB** = Normal (500kHz = Dia 4.45mm)
	002 = 2MHz			**195-152** = Tip Length 19.5mm - Total Length 152mm (6.0")	**NB** = Normal (2MHz = Dia 3.30mm)
	006 = 6MHz			**195-203** = Tip Length 19.5mm - Total Length 203mm (8.0")	**NB** = Normal (6MHz = Dia 2.34mm)
				195-254 = Tip Length 19.5mm - Total Length 254mm (10.0")	**FB =** Fine (200k = Dia 3.30mm)
				195-305 = Tip Length 19.5mm - Total Length 305mm (12.0")	**FB** = Fine (500kHz = Dia 3.30mm)
					FB = Fine (2MHz = Dia 2.34mm)

Other variants available on request.

Leads to fit above probes:

Ether NDE Part No.	Description	Instrument	Connector Instrument End	Connector Probe End	Cable Length	Configuration
ALFTRI-L04-015	Lead	Victor/Veritor	Fischer Triax	Lemo 4-Way Plug	1.5m	Bridge
ALL12-L04-015B	Lead	WeldCheck/ AeroCheck/ Vantage/ETi/Hocking	Lemo 12-Way	Lemo 4-Way Plug	1.5m	Bridge
ALL07-L04-015B	Lead	Hocking	Lemo 7-Way	Lemo 4-Way Plug	1.5m	Bridge

15deg Crank 90deg Tip - Absolute with plastic handle coding:

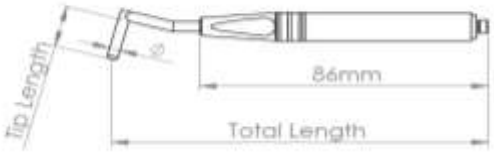

Standard

Ether NDE Part No.	Centre Frequency	Tip Length (Total Length)	∅Tip	Type
Probe, Shielded, Plastic Handle, Double crank				
PS200PD050-114N	200kHz	5. 0 (MIN) Tip Length (Total Length 114mm, 4.5”) (15deg Crank, 90deg tip Shank)	4.45	Absolute
PS200PD027-114F	200kHz	2.7 (MIN) Tip Length (Total Length 114mm, 4.5”) (15deg Crank, 90deg tip Shank)	3.30 (Fine)	Absolute
PS500PD050-114N	500kHz	5. 0 (MIN) Tip Length (Total Length 114mm, 4.5”) (15deg Crank, 90deg tip Shank)	4.45	Absolute
PS500PD027-114F	500kHz	2.7 (MIN) Tip Length (Total Length 114mm, 4.5”) (15deg Crank, 90deg tip Shank)	3.30 (Fine)	Absolute
PS002PD027-114N	2MHz	2.7 (MIN) Tip Length (Total Length 114mm, 4.5”) (15deg Crank, 90deg tip Shank)	3.30	Absolute
PS002PD017-114F	2MHz	1.7 (MIN) Tip Length (Total Length 114mm, 4.5”) (15deg Crank, 90deg tip Shank)	2.34 (Fine)	Absolute
PS006PD017-114N	6MHz	1.7 (MIN) Tip Length (Total Length 114mm, 4.5”) (15deg Crank, 90deg tip Shank)	2.34	Absolute
Please see matrix below for other options, specials available on request.				

Other

15deg Crank 90deg Tip Probe Example: **PS200PD050-114N**

	Centre Frequency	Handle	Tip Type	Tip Length (mm) - Total Length (mm)	Tip Diameter (mm)
PS	**200**	**P**	**D**	**050-114**	**N**
	200 = 200kHz	**P**lastic	**D**ouble	**050-114** = Tip Length 5mm - Total Length 114mm (4.5")	**N** = Normal (200kHz = Dia 4.45mm)
	500 = 500kHz		crank	**050-127** = Tip Length 5mm - Total Length 127mm (5.0")	**N** = Normal (500kHz = Dia 4.45mm)
				050-152 = Tip Length 5mm - Total Length 152mm (6.0")	
				050-203 = Tip Length 5mm - Total Length 203mm (8.0")	
				050-254 = Tip Length 5mm - Total Length 254mm (10.0")	
				050-305 = Tip Length 5mm - Total Length 305mm (12.0")	
				064-114 = Tip Length 6.4mm - Total Length 114mm (4.5")	
				064-127 = Tip Length 6.4mm - Total Length 127mm (5.0")	
				064-152 = Tip Length 6.4mm - Total Length 152mm (6.0")	
				064-203 = Tip Length 6.4mm - Total Length 203mm (8.0")	
				064-254 = Tip Length 6.4mm - Total Length 254mm (10.0")	
				064-305 = Tip Length 6.4mm - Total Length 305mm (12.0")	
				127-114 = Tip Length 12.7mm - Total Length 114mm (4.5")	
				127-127 = Tip Length 12.7mm - Total Length 127mm (5.0")	
				127-152 = Tip Length 12.7mm - Total Length 152mm (6.0")	
				127-203 = Tip Length 12.7mm - Total Length 203mm (8.0")	
				127-254 = Tip Length 12.7mm - Total Length 254mm (10.0")	
				127-305 = Tip Length 12.7mm - Total Length 305mm (12.0")	
				190-114 = Tip Length 19.0mm - Total Length 114mm (4.5")	
				190-127 = Tip Length 19.0mm - Total Length 127mm (5.0")	

Centre Frequency	Handle	Tip Type	Tip Length (mm) - Total Length (mm)	Tip Diameter (mm)
200 = 200kHz	Plastic	Double	190-152 = Tip Length 19.0mm - Total Length 152mm (6.0")	N = Normal (200kHz = Dia 4.45mm)
500 = 500kHz		crank	190-203 = Tip Length 19.0mm - Total Length 203mm (8.0")	N = Normal (500kHz = Dia 4.45mm)
			190-254 = Tip Length 19.0mm - Total Length 254mm (10.0")	
			190-305 = Tip Length 19.0mm - Total Length 305mm (12.0")	
			245-114 = Tip Length 25.4mm - Total Length 114mm (4.5")	
			254-127 = Tip Length 25.4mm - Total Length 127mm (5.0")	
			254-152 = Tip Length 25.4mm - Total Length 152mm (6.0")	
			254-203 = Tip Length 25.4mm - Total Length 203mm (8.0")	
			254-254 = Tip Length 25.4mm - Total Length 254mm (10.0")	
			254-305 = Tip Length 25.4mm - Total Length 305mm (12.0")	
200 = 200kHz	Plastic	Double	027-114 = Tip Length 2.7mm - Total Length 114mm (4.5")	F = Fine (200k = Dia 3.30mm)
500 = 500kHz		crank	027-127 = Tip Length 2.7mm - Total Length 127mm (5.0")	F = Fine (500kHz = Dia 3.30mm)
002 = 2MHz			027-152 = Tip Length 2.7mm - Total Length 152mm (6.0")	N = Normal (2MHz = Dia 3.30mm)
			027-203 = Tip Length 2.7mm - Total Length 203mm (8.0")	
			027-254 = Tip Length 2.7mm - Total Length 254mm (10.0")	
			027-305 = Tip Length 2.7mm - Total Length 305mm (12.0")	
			064-114 = Tip Length 6.4mm - Total Length 114mm (4.5")	
			064-127 = Tip Length 6.4mm - Total Length 127mm (5.0")	
			064-152 = Tip Length 6.4mm - Total Length 152mm (6.0")	
			064-203 = Tip Length 6.4mm - Total Length 203mm (8.0")	
			064-254 = Tip Length 6.4mm - Total Length 254mm (10.0")	
			064-305 = Tip Length 6.4mm - Total Length 305mm (12.0")	
			127-114 = Tip Length 12.7mm - Total Length 114mm (4.5")	
			127-127 = Tip Length 12.7mm - Total Length 127mm (5.0")	
			127-152 = Tip Length 12.7mm - Total Length 152mm (6.0")	
			127-203 = Tip Length 12.7mm - Total Length 203mm (8.0")	
			127-254 = Tip Length 12.7mm - Total Length 254mm (10.0")	
			127-305 = Tip Length 12.7mm - Total Length 305mm (12.0")	
			190-114 = Tip Length 19.0mm - Total Length 114mm (4.5")	
			190-127 = Tip Length 19.0mm - Total Length 127mm (5.0")	
			190-152 = Tip Length 19.0mm - Total Length 152mm (6.0")	
			190-203 = Tip Length 19.0mm - Total Length 203mm (8.0")	
			190-254 = Tip Length 19.0mm - Total Length 254mm (10.0")	
			190-305 = Tip Length 19.0mm - Total Length 305mm (12.0")	
			245-114 = Tip Length 25.4mm - Total Length 114mm (4.5")	
			254-127 = Tip Length 25.4mm - Total Length 127mm (5.0")	
			254-152 = Tip Length 25.4mm - Total Length 152mm (6.0")	
			254-203 = Tip Length 25.4mm - Total Length 203mm (8.0")	
			254-254 = Tip Length 25.4mm - Total Length 254mm (10.0")	
			254-305 = Tip Length 25.4mm - Total Length 305mm (12.0")	
002 = 2MHz	Plastic	Double	027-114 = Tip Length 2.7mm - Total Length 114mm (4.5")	F = Fine (2MHz = Dia 2.34mm)
006 = 6MHz		crank	027-127 = Tip Length 2.7mm - Total Length 127mm (5.0")	N = Normal (6MHz = Dia 2.34mm)
			027-152 = Tip Length 2.7mm - Total Length 152mm (6.0")	
			027-203 = Tip Length 2.7mm - Total Length 203mm (8.0")	
			027-254 = Tip Length 2.7mm - Total Length 254mm (10.0")	
			027-305 = Tip Length 2.7mm - Total Length 305mm (12.0")	

002 = 2MHz	Plastic	Double	064-114 = Tip Length 6.4mm - Total Length 114mm (4.5")	F = Fine (2MHz = Dia 2.34mm)
006 = 6MHz		crank	064-127 = Tip Length 6.4mm - Total Length 127mm (5.0")	N = Normal (6MHz = Dia 2.34mm)
			064-152 = Tip Length 6.4mm - Total Length 152mm (6.0")	
			064-203 = Tip Length 6.4mm - Total Length 203mm (8.0")	
			064-254 = Tip Length 6.4mm - Total Length 254mm (10.0")	
			064-305 = Tip Length 6.4mm - Total Length 305mm (12.0")	
			127-114 = Tip Length 12.7mm - Total Length 114mm (4.5")	
			127-127 = Tip Length 12.7mm - Total Length 127mm (5.0")	
			127-152 = Tip Length 12.7mm - Total Length 152mm (6.0")	
			127-203 = Tip Length 12.7mm - Total Length 203mm (8.0")	
			127-254 = Tip Length 12.7mm - Total Length 254mm (10.0")	
			127-305 = Tip Length 12.7mm - Total Length 305mm (12.0")	
			190-114 = Tip Length 19.0mm - Total Length 114mm (4.5")	
			190-127 = Tip Length 19.0mm - Total Length 127mm (5.0")	
			190-152 = Tip Length 19.0mm - Total Length 152mm (6.0")	
			190-203 = Tip Length 19.0mm - Total Length 203mm (8.0")	
			190-254 = Tip Length 19.0mm - Total Length 254mm (10.0")	
			190-305 = Tip Length 19.0mm - Total Length 305mm (12.0")	
			245-114 = Tip Length 25.4mm - Total Length 114mm (4.5")	
			254-127 = Tip Length 25.4mm - Total Length 127mm (5.0")	
			254-152 = Tip Length 25.4mm - Total Length 152mm (6.0")	
			254-203 = Tip Length 25.4mm - Total Length 203mm (8.0")	
			254-254 = Tip Length 25.4mm - Total Length 254mm (10.0")	
			254-305 = Tip Length 25.4mm - Total Length 305mm (12.0")	

Other variants available on request.

Leads to fit above probes:

Ether NDE Part No.	Description	Instrument	Connector Instrument End	Connector Probe End	Cable Length	Configuration
ALLCX-M02-015A	Lead	WeldCheck/ AeroCheck/ Vantage/ETi	Lemo Coaxial	Micro Plug	1.5m	Absolute
ALL12-M02-015A	Lead	WeldCheck/ AeroCheck/ Vantage/ETi/Hocking	Lemo 12-Way	Micro Plug	1.5m	Absolute
ALL07-M02-015A	Lead	Hocking	Lemo 7-Way	Micro Plug	1.5m	Absolute
ALB02-M02-015A	Lead	Various	BNC Plug	Micro Plug	1.5m	Absolute

15deg Crank 90deg Tip - Bridge (IB Tech Inside) with plastic handle coding:

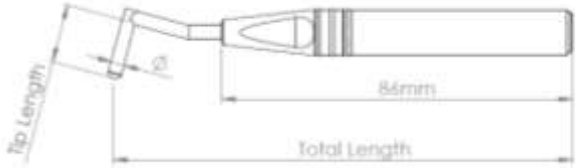

Standard

Ether NDE Part No.	Centre Frequency	Tip Length (Total Length)	ØTip	Type
Probe, Shielded, Plastic Handle, Double crank				
PS200PD050-114NB	200kHz	5. 0 (MIN) Tip Length (Total Length 114mm, 4.5”) (15deg Crank, 90deg tip Shank)	4.45	Bridge
PS200PD027-114FB	200kHz	2.7 (MIN) Tip Length (Total Length 114mm, 4.5”) (15deg Crank, 90deg tip Shank)	3.30 (Fine)	Bridge
PS500PD050-114NB	500kHz	5. 0 (MIN) Tip Length (Total Length 114mm, 4.5”) (15deg Crank, 90deg tip Shank)	4.45	Bridge
PS500PD027-114FB	500kHz	2.7 (MIN) Tip Length (Total Length 114mm, 4.5”) (15deg Crank, 90deg tip Shank)	3.30 (Fine)	Bridge
PS002PD027-114NB	2MHz	2.7 (MIN) Tip Length (Total Length 114mm, 4.5”) (15deg Crank, 90deg tip Shank)	3.30	Bridge
PS002PD017-114FB	2MHz	1.7 (MIN) Tip Length (Total Length 114mm, 4.5”) (15deg Crank, 90deg tip Shank)	2.34 (Fine)	Bridge
PS006PD017-114NB	6MHz	1.7 (MIN) Tip Length (Total Length 114mm, 4.5”) (15deg Crank, 90deg tip Shank)	2.34	Bridge
Please see matrix below for other options, specials available on request.				

Other

15deg Crank 90deg Tip Probe Example: **PS200PD050-114NB**

	Centre Frequency	Handle	Tip Type	Tip Length (mm) - Total Length (mm)	Tip Diameter (mm)
PS	**200**	**P**	**D**	**050-114**	**NB**
	200 = 200kHz	**P**lastic	**D**ouble	**050-114** = Tip Length 5mm - Total Length 114mm (4.5")	**NB** = Normal (200kHz = Dia 4.45mm)
	500 = 500kHz		crank	**050-127** = Tip Length 5mm - Total Length 127mm (5.0")	**NB** = Normal (500kHz = Dia 4.45mm)
				050-152 = Tip Length 5mm - Total Length 152mm (6.0")	
				050-203 = Tip Length 5mm - Total Length 203mm (8.0")	
				050-254 = Tip Length 5mm - Total Length 254mm (10.0")	
				050-305 = Tip Length 5mm - Total Length 305mm (12.0")	
				064-114 = Tip Length 6.4mm - Total Length 114mm (4.5")	
				064-127 = Tip Length 6.4mm - Total Length 127mm (5.0")	
				064-152 = Tip Length 6.4mm - Total Length 152mm (6.0")	
				064-203 = Tip Length 6.4mm - Total Length 203mm (8.0")	
				064-254 = Tip Length 6.4mm - Total Length 254mm (10.0")	
				064-305 = Tip Length 6.4mm - Total Length 305mm (12.0")	
				127-114 = Tip Length 12.7mm - Total Length 114mm (4.5")	
				127-127 = Tip Length 12.7mm - Total Length 127mm (5.0")	
				127-152 = Tip Length 12.7mm - Total Length 152mm (6.0")	
				127-203 = Tip Length 12.7mm - Total Length 203mm (8.0")	
				127-254 = Tip Length 12.7mm - Total Length 254mm (10.0")	
				127-305 = Tip Length 12.7mm - Total Length 305mm (12.0")	
				190-114 = Tip Length 19.0mm - Total Length 114mm (4.5")	
				190-127 = Tip Length 19.0mm - Total Length 127mm (5.0")	

Centre Frequency	Handle	Tip Type	Tip Length (mm) - Total Length (mm)	Tip Diameter (mm)
200 = 200kHz	Plastic	Double	190-152 = Tip Length 19.0mm - Total Length 152mm (6.0")	NB = Normal (200kHz = Dia 4.45mm)
500 = 500kHz		crank	190-203 = Tip Length 19.0mm - Total Length 203mm (8.0")	NB = Normal (500kHz = Dia 4.45mm)
			190-254 = Tip Length 19.0mm - Total Length 254mm (10.0")	
			190-305 = Tip Length 19.0mm - Total Length 305mm (12.0")	
			245-114 = Tip Length 25.4mm - Total Length 114mm (4.5")	
			254-127 = Tip Length 25.4mm - Total Length 127mm (5.0")	
			254-152 = Tip Length 25.4mm - Total Length 152mm (6.0")	
			254-203 = Tip Length 25.4mm - Total Length 203mm (8.0")	
			254-254 = Tip Length 25.4mm - Total Length 254mm (10.0")	
			254-305 = Tip Length 25.4mm - Total Length 305mm (12.0")	
200 = 200kHz	Plastic	Double	027-114 = Tip Length 2.7mm - Total Length 114mm (4.5")	FB = Fine (200k = Dia 3.30mm)
500 = 500kHz		crank	027-127 = Tip Length 2.7mm - Total Length 127mm (5.0")	FB = Fine (500kHz = Dia 3.30mm)
002 = 2MHz			027-152 = Tip Length 2.7mm - Total Length 152mm (6.0")	NB = Normal (2MHz = Dia 3.30mm)
			027-203 = Tip Length 2.7mm - Total Length 203mm (8.0")	
			027-254 = Tip Length 2.7mm - Total Length 254mm (10.0")	
			027-305 = Tip Length 2.7mm - Total Length 305mm (12.0")	
			064-114 = Tip Length 6.4mm - Total Length 114mm (4.5")	
			064-127 = Tip Length 6.4mm - Total Length 127mm (5.0")	
			064-152 = Tip Length 6.4mm - Total Length 152mm (6.0")	
			064-203 = Tip Length 6.4mm - Total Length 203mm (8.0")	
			064-254 = Tip Length 6.4mm - Total Length 254mm (10.0")	
			064-305 = Tip Length 6.4mm - Total Length 305mm (12.0")	
			127-114 = Tip Length 12.7mm - Total Length 114mm (4.5")	
			127-127 = Tip Length 12.7mm - Total Length 127mm (5.0")	
			127-152 = Tip Length 12.7mm - Total Length 152mm (6.0")	
			127-203 = Tip Length 12.7mm - Total Length 203mm (8.0")	
			127-254 = Tip Length 12.7mm - Total Length 254mm (10.0")	
			127-305 = Tip Length 12.7mm - Total Length 305mm (12.0")	
			190-114 = Tip Length 19.0mm - Total Length 114mm (4.5")	
			190-127 = Tip Length 19.0mm - Total Length 127mm (5.0")	
			190-152 = Tip Length 19.0mm - Total Length 152mm (6.0")	
			190-203 = Tip Length 19.0mm - Total Length 203mm (8.0")	
			190-254 = Tip Length 19.0mm - Total Length 254mm (10.0")	
			190-305 = Tip Length 19.0mm - Total Length 305mm (12.0")	
			245-114 = Tip Length 25.4mm - Total Length 114mm (4.5")	
			254-127 = Tip Length 25.4mm - Total Length 127mm (5.0")	
			254-152 = Tip Length 25.4mm - Total Length 152mm (6.0")	
			254-203 = Tip Length 25.4mm - Total Length 203mm (8.0")	
			254-254 = Tip Length 25.4mm - Total Length 254mm (10.0")	
			254-305 = Tip Length 25.4mm - Total Length 305mm (12.0")	
002 = 2MHz	Plastic	Double	027-114 = Tip Length 2.7mm - Total Length 114mm (4.5")	FB = Fine (2MHz = Dia 2.34mm)
006 = 6MHz		crank	027-127 = Tip Length 2.7mm - Total Length 127mm (5.0")	NB = Normal (6MHz = Dia 2.34mm)
			027-152 = Tip Length 2.7mm - Total Length 152mm (6.0")	
			027-203 = Tip Length 2.7mm - Total Length 203mm (8.0")	
			027-254 = Tip Length 2.7mm - Total Length 254mm (10.0")	

			027-305 = Tip Length 2.7mm - Total Length 305mm (12.0")	
002 = 2MHz	Plastic	Double	064-114 = Tip Length 6.4mm - Total Length 114mm (4.5")	FB = Fine (2MHz = Dia 2.34mm)
006 = 6MHz		crank	064-127 = Tip Length 6.4mm - Total Length 127mm (5.0")	NB = Normal (6MHz = Dia 2.34mm)
			064-152 = Tip Length 6.4mm - Total Length 152mm (6.0")	
			064-203 = Tip Length 6.4mm - Total Length 203mm (8.0")	
			064-254 = Tip Length 6.4mm - Total Length 254mm (10.0")	
			064-305 = Tip Length 6.4mm - Total Length 305mm (12.0")	
			127-114 = Tip Length 12.7mm - Total Length 114mm (4.5")	
			127-127 = Tip Length 12.7mm - Total Length 127mm (5.0")	
			127-152 = Tip Length 12.7mm - Total Length 152mm (6.0")	
			127-203 = Tip Length 12.7mm - Total Length 203mm (8.0")	
			127-254 = Tip Length 12.7mm - Total Length 254mm (10.0")	
			127-305 = Tip Length 12.7mm - Total Length 305mm (12.0")	
			190-114 = Tip Length 19.0mm - Total Length 114mm (4.5")	
			190-127 = Tip Length 19.0mm - Total Length 127mm (5.0")	
			190-152 = Tip Length 19.0mm - Total Length 152mm (6.0")	
			190-203 = Tip Length 19.0mm - Total Length 203mm (8.0")	
			190-254 = Tip Length 19.0mm - Total Length 254mm (10.0")	
			190-305 = Tip Length 19.0mm - Total Length 305mm (12.0")	
			245-114 = Tip Length 25.4mm - Total Length 114mm (4.5")	
			254-127 = Tip Length 25.4mm - Total Length 127mm (5.0")	
			254-152 = Tip Length 25.4mm - Total Length 152mm (6.0")	
			254-203 = Tip Length 25.4mm - Total Length 203mm (8.0")	
			254-254 = Tip Length 25.4mm - Total Length 254mm (10.0")	
			254-305 = Tip Length 25.4mm - Total Length 305mm (12.0")	

Other variants available on request.

Leads to fit above probes:

Ether NDE Part No.	Description	Instrument	Connector Instrument End	Connector Probe End	Cable Length	Configuration
ALFTRI-L04-015	Lead	Victor/Veritor	Fischer Triax	Lemo 4-Way Plug	1.5m	Bridge
ALL12-L04-015B	Lead	WeldCheck/ AeroCheck/ Vantage/ETi/Hocking	Lemo 12-Way	Lemo 4-Way Plug	1.5m	Bridge
ALL07-L04-015B	Lead	Hocking	Lemo 7-Way	Lemo 4-Way Plug	1.5m	Bridge

Pencil Probe (Unshielded) - Absolute

Straight:

Application:

Unshielded Absolute pencil probes have a broad frequency range, used extensively in the Aerospace industry.

Specification:

- Micro connector
- Centre frequency range - 200kHz 500kHz, 2MHz, 6MHz
- Operating range – 200kHz (50kHz – 600kHz), 500kHz (150kHz – 1.5MHz), 2MHz – (650kHz – 6MHz), 6MHz – (2MHz – 18MHz)
- Used on Fe & NFe applications
- Disconnectable

Ether NDE Part No.	Description	Centre Frequency	Fe/NFE
PU200PSFENFE	Probe, Unshielded, 200KHz, Fe + NFe, Plastic Handle, Straight, 100mm Long	200kHz	Fe +Nfe
PU500PSFENFE	Probe, Unshielded, 500KHz, Fe + NFe, Plastic Handle, Straight, 100mm Long	500kHz	Fe + Nfe
PU002PSNFE	Probe, Unshielded, 2MHz, NFe, Plastic Handle, Straight, 100mm Long	2MHz	Nfe
PU002PSFE	Probe, Unshielded, 2MHz, Fe, Plastic Handle, Straight, 100mm Long	2MHz	Fe
PU006PSNFE	Probe, Unshielded, 6MHz, NFe, Plastic Handle, Straight, 100mm Long	6MHz	NFe
PU006PSFE	Probe, Unshielded, 6MHz, Fe, Plastic Handle, Straight, 100mm Long	6MHz	Fe

Leads to fit above probes:

Ether NDE Part No.	Description	Instrument	Connector Instrument End	Connector Probe End	Cable Length	Configuration
ALLCX-M02-015A	Lead	WeldCheck/ AeroCheck/ Vantage/ETi	Lemo Coaxial	Micro Plug	1.5m	Absolute
ALL12-M02-015A	Lead	WeldCheck/ AeroCheck/ Vantage/ETi/Hocking	Lemo 12-Way	Micro Plug	1.5m	Absolute
ALL07-M02-015A	Lead	Hocking	Lemo 7-Way	Micro Plug	1.5m	Absolute
ALB02-M02-015A	Lead	Various	BNC Plug	Micro Plug	1.5m	Absolute

Thread Inspection Probes (Unshielded) - Absolute

Pencil Type

Straight - External Threads (Bolts):

90deg Crank - External and Internal Threads (Bolts and Nuts):

65deg Crank – Internal Thread (Nuts):

Application:

Unshielded Absolute thread inspection probes – for crack detection in external and internal threads.

Specification:

- Micro connector
- Centre frequency range - 200kHz 500kHz, 2MHz
- Operating range – 200kHz (50kHz – 600kHz), 500kHz (150kHz – 1.5MHz), 2MHz – (650kHz – 6MHz)
- Used on Fe & NFe applications
- Disconnectable

Notes:

This range of probes comes with either a pointed or chiselled tip.

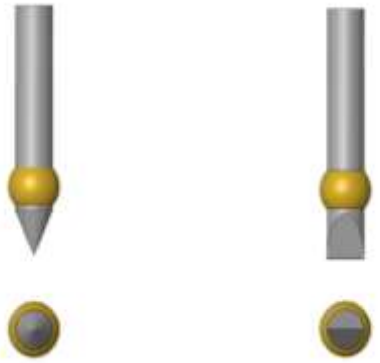

Probe Coding:

Straight - External Threads (Bolts)

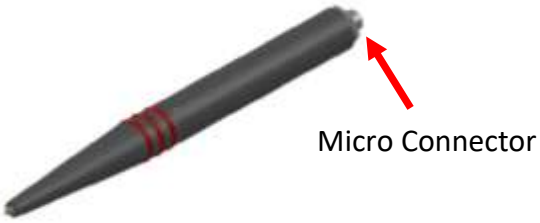

Ether NDE Part No.	Description	Centre Frequency	Tip Shape
Probe, Thread, External (Straight), Pointed/Chiselled			
PTE200PNFE	Probe, Thread, External, 200kHz, Pointed, NFE, Unshielded.	200kHz	Pointed
PTE200PFE	Probe, Thread, External, 200kHz, Pointed, FE, Unshielded.	200kHz	Pointed
PTE200CNFE	Probe, Thread, External, 200kHz, Chisel, NFE, Unshielded.	200kHz	Chisel
PTE200CFE	Probe, Thread, External, 200kHz, Chisel, FE, Unshielded.	200kHz	Chisel
PTE500PNFE	Probe, Thread, External, 500kHz, Pointed, NFE, Unshielded.	500kHz	Pointed
PTE500PFE	Probe, Thread, External, 500kHz, Pointed, FE, Unshielded.	500kHz	Pointed
PTE500CNFE	Probe, Thread, External, 500kHz, Chisel, NFE, Unshielded.	500kHz	Chisel
PTE500CFE	Probe, Thread, External, 500kHz, Chisel, FE, Unshielded.	500kHz	Chisel
PTE002PNFE	Probe, Thread, External, 2MHz, Pointed, NFE, Unshielded.	2MHz	Pointed
PTE002PFE	Probe, Thread, External, 2MHz, Pointed, FE, Unshielded.	2MHz	Pointed
PTE002CNFE	Probe, Thread, External, 2MHz, Chisel, NFE, Unshielded.	2MHz	Chisel
PTE002CFE	Probe, Thread, External, 2MHz, Chisel, FE, Unshielded.	2MHz	Chisel
Other options available on request.			

90deg Crank - External and Internal Threads (Bolts and Nuts)

Ether NDE Part No.	Description	Centre Frequency	Tip Shape
Probe, Thread, Right Angled, Pointed/Chiselled			
PTR200PNFE	Probe, Thread, 90 deg, 200kHz, Pointed, NFE, Unshielded.	200kHz	Pointed
PTR200PFE	Probe, Thread, 90 deg, 200kHz, Pointed, FE, Unshielded.	200kHz	Pointed
PTR200CNFE	Probe, Thread, 90 deg, 200kHz, Chisel, NFE, Unshielded.	200kHz	Chisel
PTR200CFE	Probe, Thread, 90 deg, 200kHz, Chisel, FE, Unshielded.	200kHz	Chisel
PTR500PNFE	Probe, Thread, 90 deg, 500kHz, Pointed, NFE, Unshielded.	500kHz	Pointed
PTR500PFE	Probe, Thread, 90 deg, 500kHz, Pointed, FE, Unshielded.	500kHz	Pointed
PTR500CNFE	Probe, Thread, 90 deg, 500kHz, Chisel, NFE, Unshielded.	500kHz	Chisel
PTR500CFE	Probe, Thread, 90 deg, 500kHz, Chisel, FE, Unshielded.	500kHz	Chisel
PTR002PNFE	Probe, Thread, 90 deg, 2MHz, Pointed, NFE, Unshielded.	2MHz	Pointed
PTR002PFE	Probe, Thread, 90 deg, 2MHz, Pointed, FE, Unshielded.	2MHz	Pointed
PTR002CNFE	Probe, Thread, 90 deg, 2MHz, Chisel, NFE, Unshielded.	2MHz	Chisel
PTR002CFE	Probe, Thread, 90 deg, 2MHz, Chisel, FE, Unshielded.	2MHz	Chisel
Other options available on request.			

65deg Crank – Internal Thread (Nuts)

Ether NDE Part No.	Description	Centre Frequency	Tip Shape
Probe, Thread, Internal 65 deg, Pointed/Chiselled			
PTI200PNFE	Probe, Thread, Internal 65deg, 200kHz, Pointed, NFE, Unshielded.	200kHz	Pointed
PTI200PFE	Probe, Thread, Internal 65deg, 200kHz, Pointed, FE, Unshielded.	200kHz	Pointed
PTI200CNFE	Probe, Thread, Internal 65deg, 200kHz, Chisel, NFE, Unshielded.	200kHz	Chisel
PTI200CFE	Probe, Thread, Internal 65deg, 200kHz, Chisel, FE, Unshielded.	200kHz	Chisel
PTI500PNFE	Probe, Thread, Internal 65deg, 200kHz, Pointed, NFE, Unshielded.	500kHz	Pointed
PTI500PFE	Probe, Thread, Internal 65deg, 500kHz, Pointed, FE, Unshielded.	500kHz	Pointed
PTI500CNFE	Probe, Thread, Internal 65deg, 500kHz, Chisel, NFE, Unshielded.	500kHz	Chisel

PTI500CFE	Probe, Thread, Internal 65deg, 500kHz, Chisel, FE, Unshielded.	500kHz	Chisel
PTI002PNFE	Probe, Thread, Internal 65deg, 2MHz, Pointed, NFE, Unshielded.	2MHz	Pointed
PTI002PFE	Probe, Thread, Internal 65deg, 2MHz, Pointed, FE, Unshielded.	2MHz	Pointed
PTI002CNFE	Probe, Thread, Internal 65deg, 2MHz, Chisel, NFE, Unshielded.	2MHz	Chisel
PTI002CFE	Probe, Thread, Internal 65deg, 2MHz, Chisel, FE, Unshielded.	2MHz	Chisel
Other options available on request.			

Leads to fit above probes:

Ether NDE Part No.	Description	Instrument	Connector Instrument End	Connector Probe End	Cable Length	Configuration
ALLCX-M02-015A	Lead	Weld/AeroCheck /ETi	Lemo Coaxial	Micro Plug	1.5m	Absolute
ALL12-M02-015A	Lead	Hocking	Lemo 12-Way	Micro Plug	1.5m	Absolute
ALB02-M02-015A	Lead	Various	BNC Plug	Micro Plug	1.5m	Absolute

Saddle and Plug - Thread Inspection Probes

Threaded sections can be inspected using a dedicated probe which can be supplied to fit either external or internal threads precisely.

External Thread Probe

Internal Thread Plug Probe

External threads can be inspected with a Saddle probe with a thread cut into the concave surface. The coil is fitted into the thread section to allow inspection to be carried out with very little probe wobble. A Saddle probe can be in the shape of a segment to screw along the thread like a nut.

Internal threaded sections can be inspected with a threaded Plug probe with a sensor moulded into the threaded area. The Plug probe is then simply moved along the thread, in the area of interest, to ensure 100% inspection.

Saddle and Plug probes are manufactured to order. A sample of the threaded section is usually required as a pattern for making probes.

Broad Band Probes – Absolute/Bridge

Absolute

BNC Connector

Bridge

Lemo 4-Way

Application:

Absolute unshielded broad band probes - for general purpose inspection of surface breaking defects and metallurgy variations and to estimate coating (Paint) thickness.

Bridge unshielded broad band probes – Ether NDE newly developed "IB Tech Inside " absolute intrinsically balanced technology which further improves the signal to noise ratio of conventional absolute probes giving a significant improvement in inspection reliability, uses Lemo 4-Way connector.

Specification:

- Broad range with centre frequency – 5kHz, 20kHz, 100kHz, 500kHz, 2MHz
- Plastic Handle with neoprene grip
- Connector – BNC for absolute and Lemo 4-Way for bridge (IB Tech Inside)

Notes:

A range of balance loads also available for use with some impedance plane instruments.

Absolute Probe Coding:

Ether NDE Part No.	Description	Centre Frequency	Frequency Range	Type/Connector
Probe, Unshielded, Broad Band				
PUB2M	Probe, Unshielded, Broad Band, 2MHz	2MHz (5.6uH)	500kHz - 4MHz	Absolute/BNC Socket
PUB500K	Probe, Unshielded, Broad Band, 500k	500kHz (22uH)	150kHz - 1MHz	Absolute/BNC Socket
PUB100K	Probe, Unshielded, Broad Band, 100k	100kHz (82uH)	35kHz - 250kHz	Absolute/BNC Socket
PUB20K	Probe, Unshielded, Broad Band, 20k	20kHz (390uH)	7kHz - 60kHz	Absolute/BNC Socket
PUB5K	Probe, Unshielded, Broad Band, 5k	5kHz (1500uH)	2kHz - 15kHz	Absolute/BNC Socket

Leads to fit above probes:

Ether NDE Part No.	Description	Instrument	Connector Instrument End	Connector Probe End	Cable Length	Configuration
ALLCX-M02-015A	Lead	Weld/AeroCheck Range, ETi-200	Lemo OO Coaxial	BNC Plug	1.5m	Absolute
ALL12-B02-015A	Lead	Weld/AeroCheck Range, ETi-200, ETi-300	Lemo 12-Way Plug	BNC Plug	1.5m	Absolute
ALL07-B02-015A	Lead	Hocking	Lemo 7-Way Plug	BNC Plug	1.5m	Absolute
ALB02-B02-015A	Lead	ETi-300/Various	BNC Plug	BNC Plug	1.5m	Absolute

Bridge Probe Coding:

Ether NDE Part No.	Description	Centre Frequency	Frequency Range	Type/Connector
Probe, Unshielded, Broad Band				
PUB2MB	Probe, Unshielded, Broad Band, 2MHz	2MHz (5.6uH)	500kHz - 4MHz	Bridge/Lemo 4-Way
PUB500KB	Probe, Unshielded, Broad Band, 500k	500kHz (22uH)	150kHz - 1MHz	Bridge/Lemo 4-Way
PUB100KB	Probe, Unshielded, Broad Band, 100k	100kHz (82uH)	35kHz - 250kHz	Bridge/Lemo 4-Way
PUB20KB	Probe, Unshielded, Broad Band, 20k	20kHz (390uH)	7kHz - 60kHz	Bridge/Lemo 4-Way
PUB5KB	Probe, Unshielded, Broad Band, 5k	5kHz (1500uH)	2kHz - 15kHz	Bridge/Lemo 4-Way

Leads to fit above probes:

Ether NDE Part No.	Description	Instrument	Connector Instrument End	Connector Probe End	Cable Length	Configuration
ALL12-L04-015B	Lead	Weld/Aero/Phase /AM/RailCheck Range, ETi-200, ETi-300	Lemo 12-Way	Lemo 4-Way Plug	1.5m	Bridge
ALL07-L04-015B	Lead	Hocking	Lemo 7-Way	Lemo 4-Way Plug	1.5m	Bridge
ALL04-L04-015-B	Lead	Phase/AM/RailCheck Range	Lemo 4-Way Plug	Lemo 4-Way Plug	1.5m	Bridge

Rotating Probes - Reflection

Rigid Stainless Steel

Fischer 4-Way

Delrin Flexible

Fischer 4-Way

Application:

Differential Rotating Probes - for internal diameter inspection of bore holes, countersinks and counter bores.

Specification:

- Probe diameters from 1.6 to 50mm, available in 0.01mm steps
- Fischer connector to Ether Small and Large drive also compatible with Hocking, GE, Rohmann and Forster drive units.
- Frequency range from 200kHz to 2MHz
- Comes in rigid stainless steel and delrin flexible options

Notes:

When ordering rotating probes 0.1mm is automatically taken off probe diameter during manufacture, this should be good for typical hole condition and manufacturing tolerances. Where tolerances are poor allow for greater clearance.

Example: To inspect a ∅12.7 (1/2”) hole a ∅12.7 probe should be ordered which will be manufactured to a ∅12.6.

Rigid Stainless Steel Coding

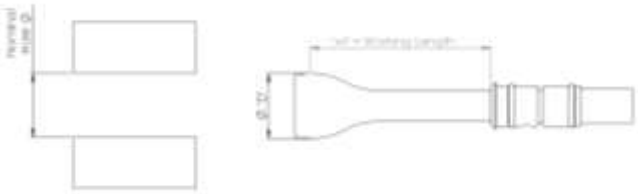

Ether NDE Part No.	Description	Nominal Hole Dia "	Nominal Hole Dia mm	'wl' - Working Length mm
Imperial Examples:				
PRR0159-035	Probe. Rotating, Rigid, Dia = 1.59mm (1/16”), wl = 35mm	1/16”	1.59	35.0
PRR0198-035	Probe. Rotating, Rigid, Dia = 1.98mm (5/64”), wl = 35mm	5/64”	1.98	35.0
PRR0238-035	Probe. Rotating, Rigid, Dia = 2.38mm (3/32”), wl = 35mm	3/32”	2.38	35.0
PRR0278-035	Probe. Rotating, Rigid, Dia = 2.78mm (7/64”), wl = 35mm	7/64”	2.87	35.0
PRR0318-035	Probe. Rotating, Rigid, Dia = 3.18mm (1/8”), wl = 35mm	1/8”	3.18	35.0
PRR0357-035	Probe. Rotating, Rigid, Dia = 3.57mm (9/64”), wl = 35mm	9/64"	3.57	35.0
PRR0397-035	Probe. Rotating, Rigid, Dia = 3.97mm (5/32”), wl = 35mm	5/32"	3.97	35.0
PRR0437-035	Probe. Rotating, Rigid, Dia = 4.37mm (11/64”), wl = 35mm	11/64"	4.37	35.0
PRR0476-035	Probe. Rotating, Rigid, Dia = 4.76mm (3/16”), wl = 35mm	3/16"	4.76	35.0
PRR0516-035	Probe. Rotating, Rigid, Dia = 5.16mm (13/64”), wl = 35mm	13/64"	5.16	35.0
PRR0556-035	Probe. Rotating, Rigid, Dia = 5.56mm (7/32”), wl = 35mm	7/32"	5.56	35.0
PRR0595-035	Probe. Rotating, Rigid, Dia = 5.95mm (15/64”), wl = 35mm	15/64"	5.95	35.0
PRR0635-035	Probe. Rotating, Rigid, Dia = 6.35mm (1/4”), wl = 35mm	1/4"	6.35	35.0
PRR0675-035	Probe. Rotating, Rigid, Dia = 6.75mm (17/64”), wl = 35mm	17/64"	6.75	35.0
PRR0714-035	Probe. Rotating, Rigid, Dia = 7.14mm (9/32”), wl = 35mm	9/32"	7.14	35.0
PRR0754-035	Probe. Rotating, Rigid, Dia = 7.54mm (19/64”), wl = 35mm	19/64"	7.54	35.0
PRR0794-035	Probe. Rotating, Rigid, Dia = 7.94mm (5/16”), wl = 35mm	5/16"	7.94	35.0
PRR0833-035	Probe. Rotating, Rigid, Dia = 8.33mm (13/64”), wl = 35mm	21/64"	8.33	35.0
PRR0873-035	Probe. Rotating, Rigid, Dia = 8.73mm (11/32”), wl = 35mm	11/32"	8.73	35.0
PRR0913-035	Probe. Rotating, Rigid, Dia = 9.13mm (23/64”), wl = 35mm	23/64"	9.13	35.0
PRR0953-035	Probe. Rotating, Rigid, Dia = 9.53mm (3/8”), wl = 35mm	3/8"	9.53	35.0
PRR0992-035	Probe. Rotating, Rigid, Dia = 9.92mm (25/64”), wl = 35mm	25/64"	9.92	35.0
PRR1032-035	Probe. Rotating, Rigid, Dia = 10.32mm (13/32”), wl = 35mm	13/32"	10.32	35.0
PRR1072-035	Probe. Rotating, Rigid, Dia = 10.72mm (27/64”), wl = 35mm	27/64"	10.72	35.0
PRR1111-035	Probe. Rotating, Rigid, Dia = 11.11mm (7/16”), wl = 35mm	7/16"	11.11	35.0
PRR1151-035	Probe. Rotating, Rigid, Dia = 11.51mm (29/64”), wl = 35mm	29/64"	11.51	35.0
PRR1191-035	Probe. Rotating, Rigid, Dia = 11.91mm (15/32”), wl = 35mm	15/32"	11.91	35.0
PRR1230-035	Probe. Rotating, Rigid, Dia = 12.30mm (31/64”), wl = 35mm	31/64"	12.30	35.0
PRR1270-035	Probe. Rotating, Rigid, Dia = 12.70mm (1/2”) wl = 35mm	1/2"	12.70	35.0
PRR1310-065	Probe. Rotating, Rigid, Dia = 13.10mm (33/64”) wl = 65mm	33/64”	13.10	65.0
PRR1350-065	Probe. Rotating, Rigid, Dia = 13.50mm (17/32”) wl = 65mm	17/32”	13.50	65.0
PRR1390-065	Probe. Rotating, Rigid, Dia = 13.90mm (35/64”) wl = 65mm	35/64”	13.9	65.0
PRR1430-065	Probe. Rotating, Rigid, Dia = 14.30mm (9/16”) wl = 65mm	9/16”	14.3	65.0
PRR1470-065	Probe. Rotating, Rigid, Dia = 14.70mm (37/64”) wl = 65mm	37/64”	14.7	65.0
PRR1510-065	Probe. Rotating, Rigid, Dia = 15.10mm (19/32”) wl = 65mm	19/32”	15.1	65.0
PRR1550-065	Probe. Rotating, Rigid, Dia = 15.50mm (39/64”) wl = 65mm	39/64”	15.5	65.0
PRR1590-065	Probe. Rotating, Rigid, Dia = 15.90mm (5/8”) wl = 65mm	5/8”	15.9	65.0
PRR1630-065	Probe. Rotating, Rigid, Dia = 16.30mm (41/64”) wl = 65mm	41/64”	16.3	65.0
PRR1670-065	Probe. Rotating, Rigid, Dia = 16.70mm (21/32””) wl = 65mm	21/32”	16.7	65.0
PRR1710-065	Probe. Rotating, Rigid, Dia = 17.10mm (43/64”) wl = 65mm	43/64”	17.1	65.0
PRR1750-065	Probe. Rotating, Rigid, Dia = 17.50mm (11/16”) wl = 65mm	11/16”	17.5	65.0

Ether NDE Part No.	Description	Nominal Hole Dia "	Nominal Hole Dia mm	'wl' - Working Length mm
PRR1790-065	Probe. Rotating, Rigid, Dia = 17.90mm (45/64") wl = 65mm	45/64"	17.9	65.0
PRR1830-065	Probe. Rotating, Rigid, Dia = 18.30mm (23/32") wl = 65mm	23/32"	18.3	65.0
PRR1870-065	Probe. Rotating, Rigid, Dia = 18.70mm (47/64") wl = 65mm	47/64"	18.7	65.0
PRR1910-065	Probe. Rotating, Rigid, Dia = 19.10mm (3/4") wl = 65mm	3/4"	19.1	65.0
PRR1950-065	Probe. Rotating, Rigid, Dia = 19.50mm (49/64") wl = 65mm	49/64"	19.5	65.0
PRR1980-065	Probe. Rotating, Rigid, Dia = 19.80mm (25/32") wl = 65mm	25/32"	19.8	65.0
PRR2020-065	Probe. Rotating, Rigid, Dia = 20.20mm (51/64") wl = 65mm	51/64"	20.2	65.0
PRR2060-065	Probe. Rotating, Rigid, Dia = 20.60mm (13/16") wl = 65mm	13/16"	20.6	65.0
PRR2100-065	Probe. Rotating, Rigid, Dia = 21.00mm (53/64") wl = 65mm	53/64"	21.0	65.0
PRR2140-065	Probe. Rotating, Rigid, Dia = 20.20mm (27/32") wl = 65mm	27/32"	21.4	65.0
PRR2180-065	Probe. Rotating, Rigid, Dia = 20.20mm (55/64") wl = 65mm	55/64"	21.8	65.0
PRR2220-065	Probe. Rotating, Rigid, Dia = 20.20mm (7/8") wl = 65mm	7/8"	22.2	65.0
PRR2260-065	Probe. Rotating, Rigid, Dia = 20.20mm (57/64") wl = 65mm	57/64"	22.6	65.0
PRR2300-065	Probe. Rotating, Rigid, Dia = 20.20mm (29/32") wl = 65mm	29/32"	23.0	65.0
PRR2340-065	Probe. Rotating, Rigid, Dia = 20.20mm (59/64") wl = 65mm	59/64"	23.4	65.0
PRR2380-065	Probe. Rotating, Rigid, Dia = 20.20mm (15/16") wl = 65mm	15/16"	23.8	65.0
PRR2420-065	Probe. Rotating, Rigid, Dia = 20.20mm (61/64") wl = 65mm	61/64"	24.2	65.0
PRR2460-065	Probe. Rotating, Rigid, Dia = 20.20mm (31/32") wl = 65mm	31/32"	24.6	65.0
PRR2500-065	Probe. Rotating, Rigid, Dia = 20.20mm (63/64") wl = 65mm	63/64"	25.0	65.0
PRR2540-065	Probe. Rotating, Rigid, Dia = 20.20mm (1.0") wl = 65mm	1.0	25.4	65.0
Metric Examples:				
PRR0300-035	Probe. Rotating, Rigid, Dia = 3.00mm, wl = 35mm		3.00	35.0
PRR0400-035	Probe. Rotating, Rigid, Dia = 4.00mm, wl = 35mm		4.00	35.0
PRR0500-035	Probe. Rotating, Rigid, Dia = 5.00mm, wl = 35mm		5.00	35.0
PRR0600-035	Probe. Rotating, Rigid, Dia = 6.00mm, wl = 35mm		6.00	35.0
PRR0700-035	Probe. Rotating, Rigid, Dia = 7.00mm, wl = 35mm		7.00	35.0
PRR0800-035	Probe. Rotating, Rigid, Dia = 8.00mm, wl = 35mm		8.00	35.0
PRR0900-035	Probe. Rotating, Rigid, Dia = 9.00mm, wl = 35mm		9.00	35.0
PRR1000-035	Probe. Rotating, Rigid, Dia = 10.00mm, wl = 35mm		10.00	35.0
PRR1100-035	Probe. Rotating, Rigid, Dia = 11.00mm, wl = 35mm		11.00	35.0
PRR1200-035	Probe. Rotating, Rigid, Dia = 12.00mm, wl = 35mm		12.00	35.0
PRR1300-065	Probe. Rotating, Rigid, Dia = 13.00mm, wl = 65mm		13.00	65.0
PRR1400-065	Probe. Rotating, Rigid, Dia = 14.00mm, wl = 65mm		14.00	65.0
PRR1500-065	Probe. Rotating, Rigid, Dia = 15.00mm, wl = 65mm		15.00	65.0
PRR1600-065	Probe. Rotating, Rigid, Dia = 16.00mm, wl = 65mm		16.00	65.0
PRR1700-065	Probe. Rotating, Rigid, Dia = 17.00mm, wl = 65mm		17.00	65.0
PRR1800-065	Probe. Rotating, Rigid, Dia = 18.00mm, wl = 65mm		18.00	65.0
PRR1900-065	Probe. Rotating, Rigid, Dia = 19.00mm, wl = 65mm		19.00	65.0
PRR2000-065	Probe. Rotating, Rigid, Dia = 20.00mm, wl = 65mm		20.00	65.0
PRR2100-065	Probe. Rotating, Rigid, Dia = 21.00mm, wl = 65mm		21.00	65.0
PRR2200-065	Probe. Rotating, Rigid, Dia = 22.00mm, wl = 65mm		22.00	65.0
PRR2300-065	Probe. Rotating, Rigid, Dia = 23.00mm, wl = 65mm		23.00	65.0
PRR2400-065	Probe. Rotating, Rigid, Dia = 24.00mm, wl = 65mm		24.00	65.0
PRR2500-065	Probe. Rotating, Rigid, Dia = 25.00mm, wl = 65mm		25.00	65.0
Other options available on request.				

Delrin Flexible Coding

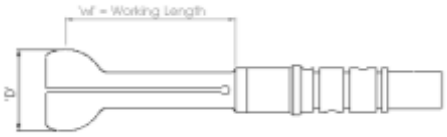

Ether NDE Part No.	Description	Hole Dia Range mm	Nominal Diameter	'wl' - Working Length mm
Examples:				
PRF040-050051	Probe. Rotating, Flexible, Dia = 4.0 – 5.0mm, wl = 51.00mm	4.0-5.0	3/16" (4.76mm)	51
PRF050-060051	Probe. Rotating, Flexible, Dia = 5.0 – 6.0mm, wl = 51.00mm	5.0-6.0	7/32" (5.56mm)	51
PRF060-070051	Probe. Rotating, Flexible, Dia = 6.0 – 7.0mm wl = 51.00mm	6.0-7.0	1/4" (6.35mm)	51
PRF070-080051	Probe. Rotating, Flexible, Dia = 7.0 – 8.0mm wl = 51.00mm	7.0-8.0	5/16" (7.94mm)	51
PRF080-090051	Probe. Rotating, Flexible, Dia = 8.0 – 9.0mm wl = 51.00mm	8.0-9.0	21/64" (8.33mm)	51
PRF090-100051	Probe. Rotating, Flexible, Dia = 9.0 – 10.0mm wl = 51.00mm	9.0-10.00	3/8" (9.53mm)	51
PRF100-110051	Probe. Rotating, Flexible, Dia = 10.0 – 11.0mm wl = 51.00mm	10.0-11.00	13/32" (10.32mm)	51
PRF110-120051	Probe. Rotating, Flexible, Dia = 11.0 – 12.0mm wl = 51.00mm	11.0-12.00	7/16" (11.11mm)	51
PRF120-130051	Probe. Rotating, Flexible, Dia = 12.0 – 13.0mm wl = 51.00mm	12.00-13.00	1/2" (12.70mm)	51
PRF130-150051	Probe. Rotating, Flexible, Dia = 13.0 – 15.0mm wl = 51.00mm	13.00 - 15.00	9/16" (14.30mm)	51
PRF150-170051	Probe. Rotating, Flexible, Dia = 15.0 – 17.0mm wl = 51.00mm	15.00 - 17.00	5/8" (15.90mm)	51
PRF170-190051	Probe. Rotating, Flexible, Dia = 17.0 – 19.0mm wl = 51.00mm	17.00 - 19.00	11/16" (17.50mm)	51
PRF190-210051	Probe. Rotating, Flexible, Dia = 19.0 – 21.0mm wl = 51.00mm	19.00 - 21.00	3/4" (19.10mm)	51
PRF210-230051	Probe. Rotating, Flexible, Dia = 21.0 – 23.0mm wl = 51.00mm	21.00 - 23.00	7/8" (22.00mm)	51
PRF230-250051	Probe. Rotating, Flexible, Dia = 23.0 – 25.0mm wl = 51.00mm	23.00 - 25.00	15/16" (23.80mm)	51
PRF250-270051	Probe. Rotating, Flexible, Dia = 25.0 – 27.0mm wl = 51.00mm	25.00 - 27.00	1" (25.40mm)	51
PRF270-290051	Probe. Rotating, Flexible, Dia = 27.0 – 29.0mm wl = 51.00mm	27.00 - 29.00	1 1/8" (28.57mm)	51
PRF290-310051	Probe. Rotating, Flexible, Dia = 29.0 – 31.0mm wl = 51.00mm	29.00 - 31.00	1 3/16" (30.17mm)	51
PRF310-330051	Probe. Rotating, Flexible, Dia = 31.0 – 33.0mm wl = 51.00mm	31.00 - 33.00	1 1/4" (31.75mm)	51
PRF330-350051	Probe. Rotating, Flexible, Dia = 33.0 – 35.0mm wl = 51.00mm	33.00 - 35.00	1 3/8" (34.93mm)	51
PRF350-370051	Probe. Rotating, Flexible, Dia = 35.0 – 37.0mm wl = 51.00mm	35.00 - 37.00	1 7/16" (36.51mm)	51
PRF370-390051	Probe. Rotating, Flexible, Dia = 37.0 – 39.0mm wl = 51.00mm	37.00 - 39.00	1 1/2" (38.10mm)	51
Other options available on request.				

Manual Bolt Hole Probes - Absolute

Manual Bolt Hole – Dia 3.2 to 11mm

Manual Bolt Hole – Dia 11.5 to 38mm

Application:

For manual internal diameter inspection of bore holes.

Specification:

- All probes have a Delrin Tip
- Connector – Micro for absolute
- Centre frequency/Operating range – 200kHz (50kHz – 600kHz), 500kHz (150kHz – 1.5MHz), 2MHz – (650kHz – 6MHz)

Example: **PB200R070-080**

Probe, Manual Bolt Hole	Centre Frequency	Shank	Tip Diameter or Range (mm) WL= (mm)	Nominal Diameter
PB	**200**	**R**	**070-080**	
	200 = 200kHz	**R**igid	**032** - Dia = 3.2, WL = 76mm	1/8”
	500 = 500kHz		**036** - Dia = 3.6, WL = 76mm	9/64”
	002 = 2MHz		**039** - Dia = 3.9, WL = 76mm	5/32”
			043 - Dia = 4.3, WL = 76mm	11/64”
			045-055 - Dia = 4.5 - 5.5, WL = 76mm	3/16”
			055-065 – Dia = 5.5 – 6.5, WL = 76mm	7/32”
			060-070 – Dia = 6.0 – 7.0, WL = 76mm	1/4”
			070-080 – Dia = 7.0 – 8.0, WL = 76mm	9/32”
			075-090 – Dia = 7.5 – 9.0, WL = 76mm	5/16”
			085-100 – Dia = 8.5 – 10.0, WL = 76mm	11/32”
			095-110 – Dia = 9.5 – 11.0, WL = 76mm	3/8”
			100-115 – Dia = 10.0 – 11.5, WL = 76mm	13/32”
			110-125 – Dia = 11.0 – 12.5, WL = 76mm	7/16”
			115-130 – Dia = 11.5 – 13.0, WL = 76mm	15/.32”
			125-140 – Dia = 12.5 – 14.0, WL = 76mm	1/2”
			130-145 – Dia = 13.0 – 14.5, WL = 76mm	17/32”
			140-155 – Dia = 14.0 – 15.5, WL = 76mm	9/16”

			150-165 – Dia = 15.0 – 16.5, WL = 76mm	19/32”
			155-170 – Dia = 15.5 – 17.0, WL = 76mm	5/8”
			165-180 – Dia = 16.5 – 18.0, WL = 76mm	21/32”
			170-185 – Dia = 17.0 – 18.5, WL = 76mm	11/16”
			180-195 – Dia = 18.0 – 19.5, WL = 76mm	23/32”
			190-205 – Dia = 19.0 – 20.5, WL = 76mm	3/14”
			195-210 – Dia = 19.5 – 21.0, WL = 76mm	25/32”
			205-220 – Dia = 20.5 – 22.0, WL = 76mm	13/16”
			210-225 – Dia = 21.0 - 22.5, WL = 76mm	27/32”
			220-235 – Dia = 22.0 - 23.5, WL = 76mm	7/8”
			230-245 – Dia = 23.0 - 24.5, WL = 76mm	29/32”
			235-250 – Dia = 23.5 – 25.0, WL = 76mm	15/16”
			245-260 – Dia = 24.5 – 26.0, WL = 76mm	31/32”
			250-265 – Dia = 25.0 – 26.5, WL = 76mm	1”
			260-275 – Dia = 26.0 – 27.5, WL = 76mm	33/32”
			265-280 – Dia = 26.5 -28.0, WL = 76mm	17/16”
			275-290 – Dia = 27.5 – 29.0, WL = 76mm	35/32”
			285-300 – Dia = 28.5 -30.0, WL = 76mm	9/8”
			290-305 – Dia = 29.0 – 30.5, WL =76mm	37/32”
			300-315 – Dia = 30.0 – 31.5, WL = 76mm	19/16”
			305-320 – Dia = 30.5 – 32.0, WL = 76mm	39/32”
			315-330 – Dia = 31.5 – 33.0, WL = 76mm	5/4”
			325-340 – Dia = 32.5 – 34.0, WL = 76mm	41/32”
			330-345 – Dia = 33.0 – 34.5, WL = 76mm	21/16”
			340-355 – Dia = 34.0 – 35.5, WL = 76mm	43/32”
			345-360 – Dia – 34.5 – 36.0, WL = 76mm	11/8”
			355-370 – Dia – 35.5 – 37.0, WL = 76mm	45/32”
			365-380 – Dia – 36.5 – 38.0, WL = 76mm	23/16”
			370-385 – Dia – 37.0 – 38.5, WL = 76mm	47/32”
			380-395 – Dia – 38.0 - 39.5, WL = 76mm	1.5”

Other variants available on request.

Leads to fit above probes:

Ether NDE Part No.	Description	Instrument	Connector Instrument End	Connector Probe End	Cable Length	Configuration
ALLCX-M02-015A	Lead	Weld/AeroCheck Range, ETi-200	Lemo OO Coaxial	Micro Plug	1.5m	Absolute
ALL12-M02-015A	Lead	Weld/Aero/Phase /AM/RailCheck Range, ETi-200, ETi-300	Lemo 12-Way Plug	Micro Plug	1.5m	Absolute
ALL07-M02-015A	Lead	Hocking	Lemo 7-Way Plug	Micro Plug	1.5m	Absolute
ALB02-M02-015A	Lead	ETi-300, Various	BNC Plug	Micro Plug	1.5m	Absolute

Standard Weld Probes - Bridge

Straight

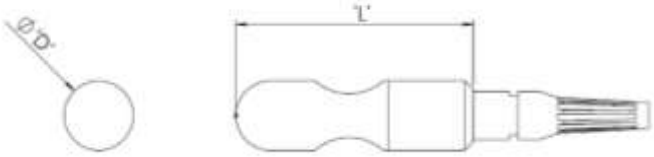

Type	'D' = Dia (mm)	'L' = Length (mm)
Small	11	47.5
Medium	16	55
Large	32	76.5

90deg Inline

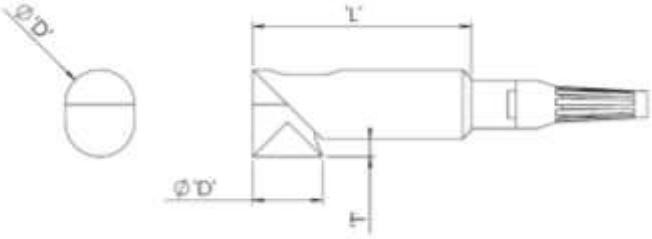

90deg Transverse

Type	'D' = Dia (mm)	'L' = Length (mm)	'T' = Tip Drop
Small	11	36.5	10.3
Medium	16	50	4.1
Large	32	128	21.1

Application:

Differential Weld probes - for in-service inspection of welded structures.

Specification:

- Straight, 90deg Inline, 90deg Right Angle
- Diameters, 11.0 (Small), 16 (Medium), 32mm (Large)
- Disconnectable and integral probe cables
- Cable lengths from 1.5 to 50meters
- Frequency range 100kH, 20kHz, 100-600kHz
- Minimal lift off signal, can find cracks though paint, oil and conductive and non-conductive coatings
- Made from hard wearing PET
- Stainless steel and ceramic tips available on request

Notes:

100kHz probes used on standard ferrous welds
100-600kHz probe can be used on Aluminium and Stainless Steel welds
20kHz probe can be used on multi-surface applications and Duplex

Standard Weld Probe Coding System

PWS100S015L12

PW	Probe Weld (Plastic)
S	Dia 11.0mm (Small)
M	Dia 16.0mm (Medium)
L	Dian 32.0mm (Large)
100	100kHz (Standard)
020	20kHz Enhanced
106	100-600kHz Multi-surface (Aluminium and Stainless Steel welds)
S	Straight
I	90 deg Inline
R	90 deg Transverse
000	Disconnect (See page 36)
015	1.5m Cable
050	5.0m Cable
100	10.0m Cable
500	50.0m Cable
1000	1000.0m Cable
L7	7 Way Lemo – Hocking Locator
L12	12 Way Lemo – WeldCheck/AeroCheck/Vantage G2, ETi-200, ETi-300
J6	6 Way Jaeger – Hocking QuickCheck, 1.1
A4	4-way Amphenol – Zetec
C3	3-way Cannon -
L14	14 Way Lemo - Vantage G1
W	Water Proof (see page 37)
C	Ceramic (High Temp) (see page 38)
S	Stainless Steel Tip (see page 38)

Example: PWS100S015L12

Probe, Weld, Dia. 11.0mm (Small), 100kHz, Straight, 1.5m Cable, Lemo 12-Way.

Other options available on request.

Disconnect Weld Probes - Bridge

Straight

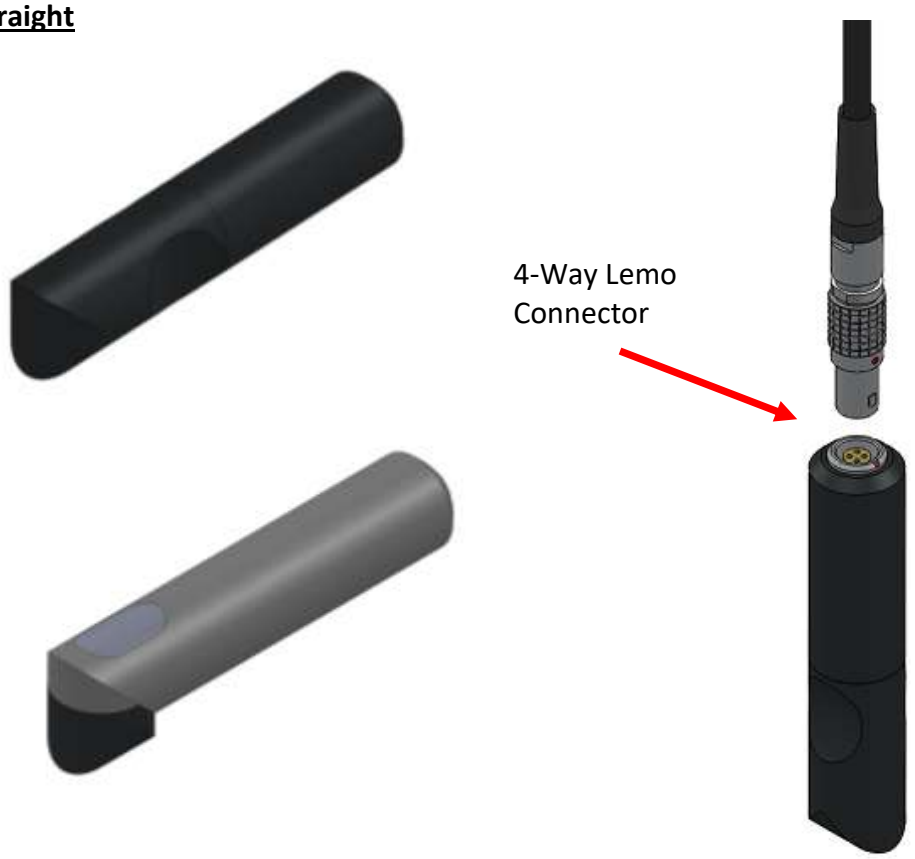

Notes:

- A full range of disconnectable weld probes available for quick interchange.
- Simply select "000" to probe part number as shown on weld probe coding system on previous page.

Example Probe Coding:

Ether NDE Part No.	Description	Centre Frequency	Configuration
Probe, Unshielded, Broad Band			
PWS100S000	Probe, Weld, Small (11.00mm), Straight, Disconnect	100kHz	Bridge – Lemo 4-Way
PWM100S000	Probe, Weld, Medium (16.00mm), Straight, Disconnect	100kHz	Bridge – Lemo 4-Way
PWL100S000	Probe, Weld, Large (32.00mm), Straight, Disconnect	100kHz	Bridge – Lemo 4-Way

Leads to fit above probes:

Ether NDE Part No.	Description	Instrument	Connector Instrument End	Connector Probe End	Cable Length	Configuration
ALFTRI-L04-015	Lead	Victor/Veritor	Fischer Triax	Lemo 4-Way Plug	1.5m	Bridge
ALL12-L04-015B	Lead	WeldCheck/ AeroCheck/ Vantage/ETi/ Hocking	Lemo 12-Way	Lemo 4-Way Plug	1.5m	Bridge
ALL07-L04-015B	Lead	Hocking	Lemo 7-Way	Lemo 4-Way Plug	1.5m	Bridge

Under Water Weld Probes - Bridge

Cable not shown

Application:

- Under water In-service inspection of welded structures, max length 100meters.

Probe Coding:

Ether NDE Part No.	Description	Frequency	Type
PWM100S500L12W	Probe, Weld, Medium, Dia 16.00, 100kHz, Straight, 50m Cable, Lemo 12-Way, Water Proof	100kHz	Bridge
PWM100S500J6W	Probe, Weld, Medium, Dia 16.00, 100kHz, Straight, 50m Cable, Jaeger 6-Way, Water Proof	100kHz	Bridge
PWL100S500L12W	Probe, Weld, Large, Dia 32.00, 100kHz, Straight, 50m Cable, Lemo 12-Way, Water Proof	100kHz	Bridge
PWL100S500J6W	Probe, Weld, Large, Dia 32.00, 100kHz, Straight, 50m Cable, Jaeger 6-Way, Water Proof	100kHz	Bridge
PWM100S1000L12W	Probe, Weld, Medium, Dia 16.00, 100kHz, Straight, 100m Cable, Lemo 12-Way, Water Proof	100kHz	Bridge
PWM100S1000J6W	Probe, Weld, Medium, Dia 16.00, 100kHz, Straight, 100m Cable, Jaeger 6-Way, Water Proof	100kHz	Bridge
PWL100S1000L12W	Probe, Weld, Large, Dia 32.00, 100kHz, Straight, 100m Cable, Lemo 12-Way, Water Proof	100kHz	Bridge
PWL100S1000J6W	Probe, Weld, Large, Dia 32.00, 100kHz, Straight, 100m Cable, Jaeger 6-Way, Water Proof	100kHz	Bridge

Other options available on request.

High Temp Ceramic Tipped Weld Probes - Bridge

Straight **90deg Inline** **90deg Transverse**

Application:

- In-service inspection of welded structures, works to a touch temperature of 200degC.
- Simply add a “C” to the end of a standard probe part number as shown on page 34.

Example: PWS100S015L12C
Part Number: Probe, Weld, Dia. 11.0mm (Small), 100kHz, Straight, 1.5m Cable, Lemo 12-Way, Ceramic Tip, (High Temp)

Stainless Steel Tipped Weld Probes - Bridge

Straight **90deg Inline** **90deg Transverse**

Application:

- In-service inspection of welded structures, with high wear resistance.
- Simply add a “S” to the end of a standard probe part number as shown on page 34, also available in disconnect options.

Example: PWS100S015L12S
Part Number: Probe, Weld, Dia. 11.0mm (Small), 100kHz, Straight, 1.5m Cable, Lemo 12-Way, St Steel Tip

Miniature Weld Probes - Bridge

Straight – PW002

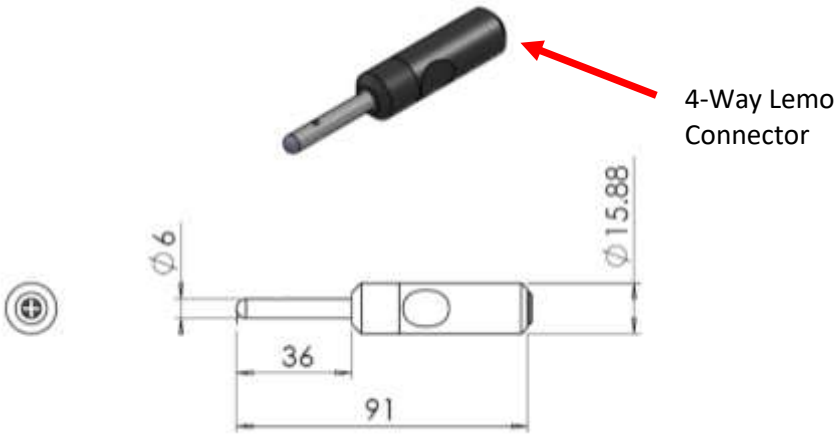

90deg Inline – PW001

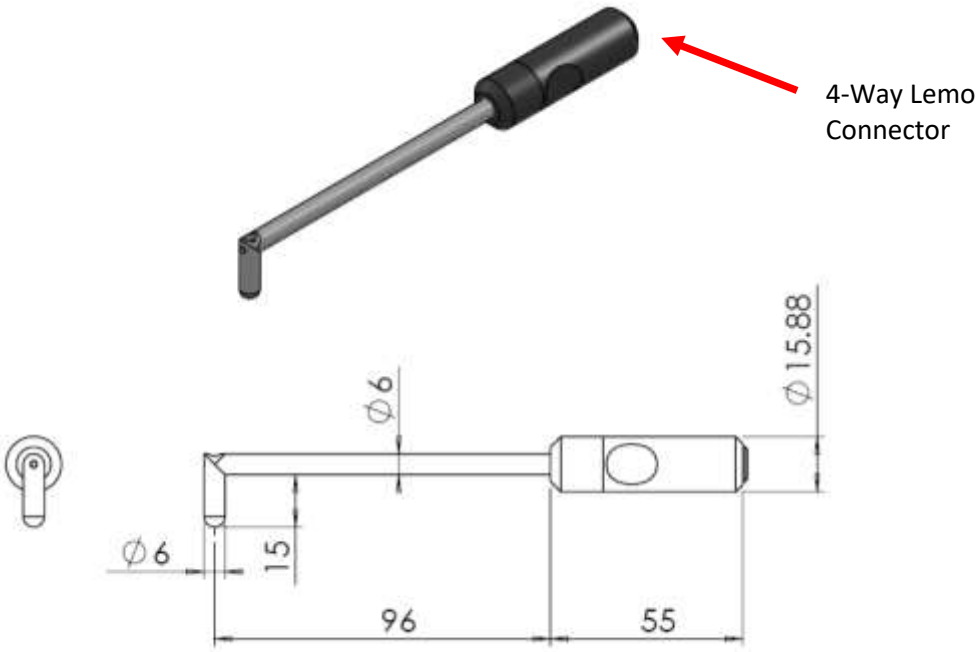

Application:

- In-service inspection of welded structures, 100kHz, for those hard to reach/confined space inspection areas.

Leads to fit above probes:

Ether NDE Part No.	Description	Instrument	Connector Instrument End	Connector Probe End	Cable Length	Configuration
ALFTRI-L04-015	Lead	Victor/Veritor	Fischer Triax	Lemo 4-Way Plug	1.5m	Bridge
ALL12-L04-015B	Lead	WeldCheck/ AeroCheck/ Vantage/ETi/ Hocking	Lemo 12-Way	Lemo 4-Way Plug	1.5m	Bridge
ALL07-L04-015B	Lead	Hocking	Lemo 7-Way	Lemo 4-Way Plug	1.5m	Bridge

Weld Probe Kits

Weld Probe Standard Kit to fit WeldCheck/AeroCheck Range:

Ether NDE Part No.	Description
Kit Part Number: KAWEL001	
Includes:	
PWM100S00	Probe, Weld, Dia 16.00mm (Medium) 100kHz, Straight, Disconnect
PUB100k	Probe, Unshielded, Broad Band, 100k (35kHz-250kHz), BNC
ATBW	Accessory, Test Block, Weld Probe, Ferrous (Steel EN1A) + 4 x 0.5mm Shims, 0.5, 1.0, 2.0mm slots
ALL12-L04-015B	Accessory, Lead, Lemo 12-Way - Lemo 4-Way, 1.5m (Bridge)
ALLCX-B02-015A	Accessory, Lead. Lemo 00 to BNC, 1.5m (Vantage)
AW003	Accessory, Butterfly PTFE Tape (Pack of 30)
AC002	Accessory, Deluxe Probe Case PHDC1

Weld Probe Advanced Kit to fit WeldCheck/AeroCheck Range:

Ether NDE Part No.	Description
Kit Part Number: KAWEL002	
Includes:	
PWS100S000	Probe, Weld, Dia 11.00mm (Small) 100kHz, Straight, Disconnect
PWM100M000	Probe, Weld, Dia 16.00mm (Medium) 100kHz, Straight, Disconnect
PUB100k	Probe, Unshielded, Broad Band, 100k (35kHz-250kHz), BNC
ATB016	Test Block WeldCheck Demo Crack Specimen - Plate with two cracks, Type A and C - Toe and Cap Plates are 4" x4", 1/4" thick with false ground crown. Standard crack size 1/4" Long x 0.040" deep.
ATBW	Accessory, Test Block, Weld Probe, Ferrous (Steel EN1A) + 4 x 0.5mm Shims, 0.5, 1.0, 2.0mm slots
ALL12-L04-015B	Accessory, Lead, Lemo 12-Way - Lemo 4-Way, 1.5m (Bridge)
ALLCX-B02-015A	Accessory, Lead. Lemo 00 to BNC, 1.5m
AW003	Accessory, Butterfly PTFE Tape (Pack of 30)
AC007	Accessory, Hard Peli 1120 Carry Case

Internal Diameter (ID) Probes - Bridge

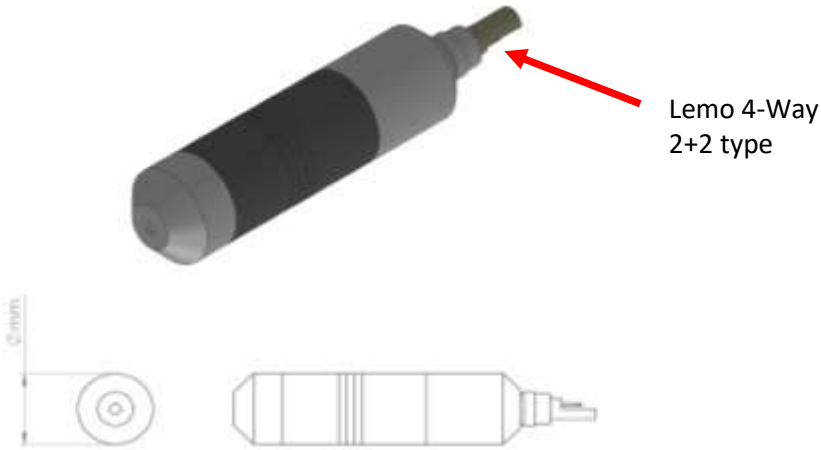

Application:

Differential ID probes - for internal diameter tube inspection, ideal for inspecting tubular heat exchangers.

Specification:

- Probe diameters from 7.5 to 150mm, available in 0.1mm steps
- Dis-connectable and integral probe cables
- Cable lengths from 3.0 to 30meters
- Frequency range from 2.7 kHz to 1MHz, centre frequencies 2.7, 10, 24, 76, 190, 400kHz.

Notes:

When ordering ID probes allow 0.8 to 1.5mm less than the tube diameter, this should be good for typical tube condition and manufacturing tolerances. Where tolerances are poor allow for greater clearance, tape can be used were necessary to reduce probe 'wobble'.

ID Probe Coding System

PID212L20R24k

PI	Probe Internal Diameter
D	Differential (Bridge)
091	Dia 9.1mm
212	Dia 21.2mm
D	Disconnectable (Standard - For probes diameters between 11.5mm and 55.0mm)
E	Disconnectable (For probes diameters above 55.0mm)
J	Jaeger 6-Way
L	Lemo 12-Way
M	Lemo 7-Way
N	Lemo 16-Way
Z	4-way Amphenol
03	3.0m Cable
05	5.0m Cable
10	10.0m Cable
20	20.0m Cable (Standard)
30	30.0m Cable
00	Disconnect
F	Flexible
R	Rigid Push/Pull (The minimum size of Rigid integral ID probes is 8.5mm; probes below this size require a flexible integral cable)
2.7k	2k7
10k	10kHz
24k	24kHz
190k	190kHz
400k	400kHz

Example Part Number: PID212L20R24k

Description: Probe, Internal Diameter, Differential, Dia 21.2mm, Lemo 12-Way, 20meters, Rigid Push/Pull, 24kHz

Other options available on request.

ID Dis-connectable Cable Coding System

CIDL20R

CI	Cable Internal Diameter
D	Differential (Bridge)
J	Jaeger 6-Way
L	Lemo 12-Way
M	Lemo 7-Way
Z	4-way Amphenol
03	3.0m Cable
05	5.0m Cable
10	10.0m Cable
20	20.0m Cable (Standard)
30	30.0m Cable
F	Flexible
R	Rigid Push/Pull
E	(Only For probes diameters above 55.0mm add a E on the end)

Example Part Number: CIDL20R

Description: Cable, Internal Diameter, Differential, Lemo 12-Way, 20meters, Rigid Push/Pull.

Other options available on request.

Lemo 4-Way
2+2 type

Rigid Push/Pull

Flexible

Standard Heat Exchanger Tube Sizes:

Recommended ID probe diameters for different tube sizes:

These sizes are chosen to give a probe diameter between 0.8 and 1.5mm less than the tube internal diameter, more clearance being allowed for larger diameters. This should be acceptable for typical conditions of tube condition and manufacturing tolerances. If these are particularly poor then a greater clearance (ie. smaller probe size) should be chosen, with tape being used as necessary to reduce probe "wobble". With tube in "as manufactured" condition larger probe size may be possible.

The table shows the calculated internal diameter of the tube, and the suggested probe size.

The following limitations apply:

- The minimum size for detachable ID probes is 11.5mm; probes below this require integral cables
- Detachable ID probe diameters over 55.0mm must be of the selections code type E
- The minimum size of Rigid integral ID probes is 8.5mm; probes below this size require a flexible integral cable

O/D T	½" 12.7mm	5/8" 15.88mm	¾" 19.05mm	7/8" 22.23mm	1" 25.4mm	1 1/8" 28.58mm
12 BWG 2.77mm	7.16	10.34	13.51	16.69	19.86	23.04
13 BWG 2.41mm	7.88	11.06	14.13	17.41	20.58	23.76
14 BWG 2.11mm	8.48	11.65	14.83	18.01	21.18	24.36
15 BWG 1.83mm	9.04	12.22	15.39	18.57	21.74	24.92
16 BWG 1.65mm	9.4	12.58	15.75	18.93	22.1	25.28
17 BWG 1.47mm	9.76	12.94	16.11	19.29	22.46	25.64
18 BWG 1.24mm	10.22	13.40	16.57	19.75	22.92	26.1
19 BWG 1.07mm	10.56	13.74	16.91	20.09	23.26	26.44
20 BWG 0.89mm	10.92	14.1	17.27	20.45	23.62	26.8
21 BWG 0.81mm	11.09	14.26	17.43	20.61	23.78	26.96
22 BWG 0.71mm	11.28	14.46	17.63	20.81	22.98	27.16

ID Probe Frequency Table:

Quick estimation of test frequency in kHz for given tube material and wall thickness

BWG thou. Inch mm	24 022 0.56	22 028 0.71	20 035 0.89	-- 040 1.02	18 049 1.24	-- 060 1.24	16 065 1.65	-- 080 2.00	14 083 2.11	12 109 2.77	10 134 3.40
Titanium 6A1-4V 1.1% IACS	1500	930	592	470	305	208	170	117	105	61	41
Inconel 600 1.67% IACS	985	613	390	309	200	137	115	77	69	40	27
304 Stainless 2.5% IACS	660	410	260	206	134	92	76	52	46	27	18
Titanium 3.6% IACS	460	285	181	143	93	63	53	36	32	19	12
70/30 Copper Nickel 5.0% IACS	330	205	130	103	67	46	38	26	23	14	9
90/10 Copper Nickel 11.9% IACS	140	86	55	43	28	19	16	10.8	9.7	5.6	3.8
Aluminium Bronze 13% IACS	126	79	50	40	26	18	15	9.9	8.9	5.2	3.4
Admiralty Brass 25% IACS	66	41	26	21	13	9.2	7.6	5.2	4.6	2.7	1.8
Brass (7030 Xu-ZN) 28% IACS	59	36	23	18	12	8.2	6.8	4.6	4.1	2.4	1.6
Brass (85/15) 37% IACS	44	28	17	14	9	6.2	5.1	3.5	3.1	1.8	1.2
Brass (95/5) 55% IACS	30	19	12	9.4	6.1	4.2	3.4	2.4	2.1	1.2	0.8
Copper 100% IACS	16	10	6.5	5.2	3.4	2.3	1.9	1.3	1.2	0.7	0.5

Spot Face Low Frequency Probes

Application:

Reflection sub surface probes - for general purpose inspection of sub-surface corrosion and flaws. This probe has excellent depth penetration making it ideal for multi-layer inspections.

Specification:

- Broad frequency ranges
- Excellent low frequency performance
- Integrated 4-way Lemo connector
- Built in balance coils
- Right angled probes are intrinsically balanced

Notes:

The lower the frequency the deeper the depth of penetration.

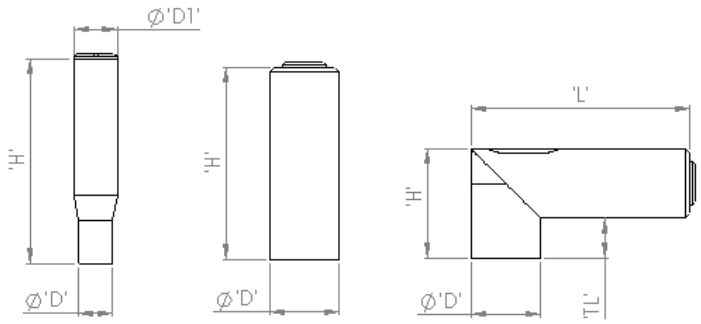

Straight	'D' mm	'D1'mm	'H' mm	'L' mm	'TL' mm
PUS07	7	10	47		
PUS08	8	10	47		
PUS11	11		44		
PUS13	13		44		
PUS16	16		44		
PUS24	24		57		
PUS32	32		59		
Right Angled					
PUR11	11		22.6	50	11.5
PUR13	13		21.5	50	8.15
PUR16	16		25	50	9.11
PUR24	24		33.80	58	10.10

Probe Coding:

Ether NDE Part No.	Description	Ø	Body Material	Frequency Range	Connector
Probe, Surface, Straight					
PUS07	Probe, Surface, Straight,	7mm	St Steel	1kHz – 100kHz	Lemo 4-Way
PUS08	Probe, Surface, Straight,	8mm	St Steel	1kHz – 100kHz	Lemo 4-Way
PUS11	Probe, Surface, Straight,	11mm	Acetal	300Hz – 100KHz	Lemo 4-Way
PUS13	Probe, Surface, Straight,	13mm	Acetal	200Hz – 200KHz	Lemo 4-Way
PUS16	Probe, Surface, Straight,	16mm	Acetal	300Hz – 100kHz	Lemo 4-Way
PUS24	Probe, Surface, Straight,	24mm	Acetal	80Hz – 60KHz	Lemo 4-Way
PUS32	Probe, Surface, Straight,	32mm	Acetal	80Hz – 60KHz	Lemo 4-Way

Ether NDE Part No.	Description	Ø	Body Material	Frequency Range	Connector
Probe, Surface, Right Angled					
PUR11	Probe, Surface, Right Angled,	11mm	Acetal	300Hz – 200KHz	Lemo 4-Way
PUR13	Probe, Surface, Right Angled,	13mm	Acetal	200Hz – 200KHz	Lemo 4-Way
PUR16	Probe, Surface, Right Angled,	16mm	Acetal	300Hz – 100kHz	Lemo 4-Way
PUR24	Probe, Surface, Right Angled,	24mm	Acetal	80Hz – 60KHz	Lemo 4-Way

Leads to fit above probes:

Ether NDE Part No.	Description	Instrument	Connector Instrument End	Connector Probe End	Cable Length	Configuration
ALL12-L04-015R	Lead	WeldCheck/ AeroCheck/ Vantage/ETi/ Hocking	Lemo 12-Way	Lemo 4-Way	1.5m	Reflection
ALL07-L04-015R	Lead	Hocking	Lemo 7-Way	Lemo 4-Way	1.5m	Reflection
ALJ06-L04-015R	Lead	Hocking	Jaeger 6-Way	Lemo 4-Way	1.5m	Reflection

Flat Surface Probes

Application:

Absolute metal sorting and general surface probes – low profile so ideal for those tight inspection areas.

Specification:

- Broad frequency ranges
- Integral 1.5m cable
- Built in load
- Low profile

Notes:

The built in load reduces thermal effect.

Probe Coding:

Ether NDE Part No.	Description	∅	Frequency Range	Inductance (µH)	Connector
Probe, Surface, Flat					*** Add: L07 for Lemo 7Way L12 for Lemo 12Way J06 for Jaeger 6-Way
PUF127-001-010-***	Probe, Surface, Flat	12.7	1.5kHz – 10kHz	3900	
PUF127-005-040-***	Probe, Surface, Flat	12.7	5kHz - 40kHz	560	
PUF127-050-400-***	Probe, Surface, Flat	12.7	50kHz – 400kHz	56	
PUF127-250-02M-***	Probe, Surface, Flat	12.7	250kHz – 2MHz	12	
PUF127-500-06M-***	Probe, Surface, Flat	12.7	500kHz – 6MHz	5.6	
PUF190-001-010-***	Probe, Surface, Flat	19	1.5kHz – 10kHz	3900	
PUF190-005-040-***	Probe, Surface, Flat	19	5kHz-40kHz	560	
PUF190-050-400-***	Probe, Surface, Flat	19	50kHz – 400kHz	56	
PUF190-250-02M-***	Probe, Surface, Flat	19	250kHz – 2MHz	12	

Large Encircling Probes

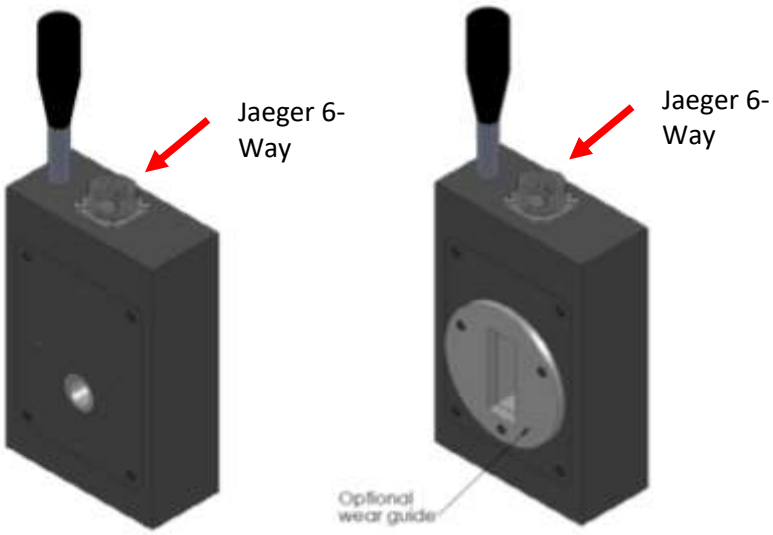

Round Square

Application:

Absolute – Reflection and Differential - Reflection encircling probes - for use with in-line or off-line high-speed inspection of tubes, wires, bars, etc.

Absolute – Reflection probes ideal for metal sorting, wall thinning and Heat Treatment Applications.

Differential – Reflection probes ideal for defect detection applications, such as cracks and pitting.

Round Encircling Probes used to Inspect **-** Round Bar, Round Tube, Wire, Metal Sorting Applications, Heat Treatment Applications

Square Encircling Probes used to Inspect **-** Square Bar, Square Tube, Box Section, Metal Sorting Applications and Heat Treatment Applications

Specification:

- Broad frequency range
- Additional wear guides can be added to standard probes, to increase wear resistance, these can be made in PET or St Steel
- Fitted with a Rapid series 12-Way Jaeger connector for quick connection and de coupling

Notes:

Probes are manufactured to the size ordered please take in account the amount of clearance needed based on the part to be inspected, if unsure please ask.

Probes are made to order due to the large variety of configuration available.

Probe Coding:

Round Encircling Probes and Wear Guides

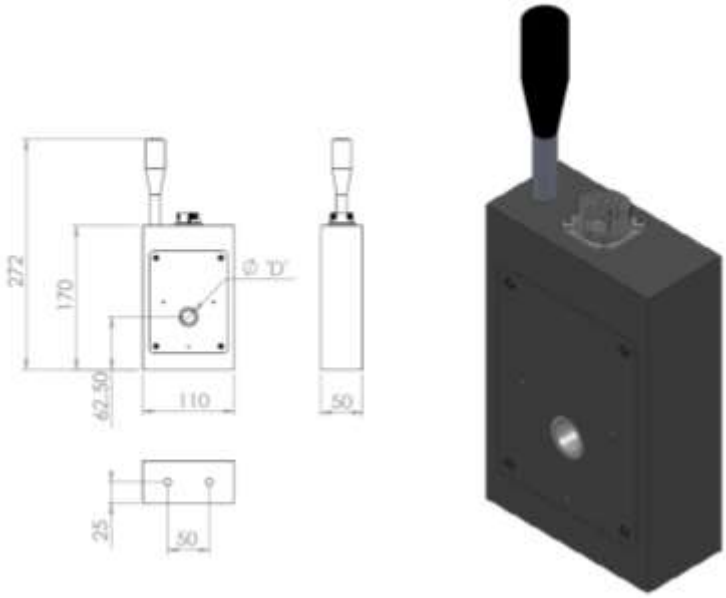

Probes are manufactured to the size ordered please take in account the amount of clearance needed based on the part to be inspected, if unsure please ask.

Ether NDE Part No.	Description	∅	Frequency	Type
Examples (full range available):				
Probe, Encircling, Round, Dia xxx, Absolute Reflection, Frequency xxx				
PER127A010	Probe, Encircling, Round	12.7	10kHz	Absolute - Reflection
PER180A100	Probe, Encircling, Round	18.0	100kHz	Absolute - Reflection
Probe, Encircling, Round, Dia xxx, Differential - Reflection, Frequency 1-500kHz				
PER127D	Probe, Encircling, Round	12.7	1kHz – 500kHz	Differential - Reflection
PER180D	Probe, Encircling, Round	18.0	1kHz – 500kHz	Differential - Reflection
Accessory, Encircling, Round, Wear Guide, PET/St Steel, Dia xxx,				
AERGP127	Accessory, Encircling, Round, Guide, PET	12.7	Standard - PET (Ertalyte) Guides – A bearing plastic with excellent wear resistance.	
AERGP180	Accessory, Encircling, Round, Guide, PET	18.0		
AERGS127	Accessory, Encircling, Round, Guide, St Steel	12.7	St Steel Guides – For very high wear resistance and high mechanical strength.	
AERGS180	Accessory, Encircling, Round, Guide, St Steel	18.0		

Square Encircling Probes and Wear Guides

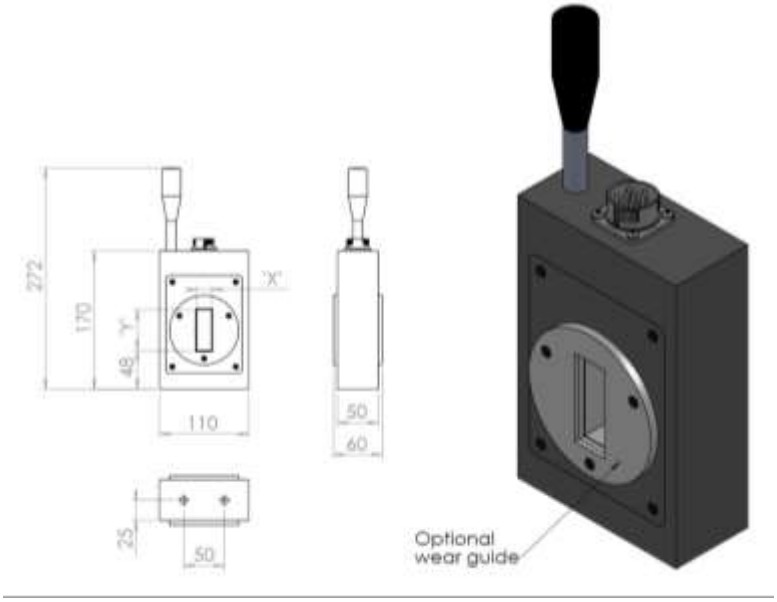

Probes are manufactured to the size ordered please take in account the amount of clearance needed based on the part to be inspected, if unsure please ask.

Round Encircling Probes and Wear Guides

Ether NDE Part No.	Description	'X' – 'Y'	Frequency	Type
Examples (full range available):				
Probe, Encircling, Square, X= xxx - Y= xxx, Absolute Reflection, Frequency xxx				
PES190-190A010	Probe, Encircling, Square	19.0 – 19.0	10kHz	Absolute - Reflection
PES180-500A100	Probe, Encircling, Square	18.0 – 50.0	100kHz	Absolute - Reflection
Probe, Encircling, Square, X= xxx - Y= xxx, Differential - Reflection, Frequency 1-500kHz				
PES190-190D	Probe, Encircling, Square	19.0 – 19.0	1kHz – 500kHz	Differential - Reflection
PES180-500D	Probe, Encircling, Square	18.0 – 50.0	1kHz – 500kHz	Differential - Reflection
Accessory, Encircling, Square, Wear Guide, PET/St Steel, X= xxx - Y= xxx				
AESGP190-190	Accessory, Encircling, Square, Guide, PET	19.0 – 19.0	Standard - PET (Ertalyte) Guides – A bearing plastic with excellent wear resistance.	
AESGP180-500	Accessory, Encircling, Square, Guide, PET	18.0 – 50.0		
AESGS190-190	Accessory, Encircling, Square, Guide, St Steel	19.0 – 19.0	St Steel Guides – For very high wear resistance and high mechanical strength.	
AESGS180-500	Accessory, Encircling, Square, Guide, St Steel	18.0 – 50.0		

Leads to fit above probes:

Ether NDE Part No.	Description	Instrument	Connector Instrument End	Connector Probe End	Cable Length	Configuration
ALL12-J12-020AR	Lead	WeldCheck/ AeroCheck/ Vantage/ETi/ Hocking	Lemo 12-Way	Jaeger 12-Way	2.0m	Absolute - Reflection
ALL07-J12-020AR	Lead	Hocking	Lemo 7-Way	Jaeger 12-Way	2.0m	Absolute - Reflection
ALJ06-J12-020AR	Lead	Hocking	Jaeger 6-Way	Jaeger 12-Way	2.0m	Absolute - Reflection
ALL12-J12-020DR	Lead	WeldCheck/ AeroCheck/ Vantage/ETi/ Hocking	Lemo 12-Way	Jaeger 12-Way	2.0m	Differential - Reflection
ALL07-J12-020DR	Lead	Hocking	Lemo 7-Way	Jaeger 12-Way	2.0m	Differential - Reflection
ALJ06-J12-020DR	Lead	Hocking	Jaeger 6-Way	Jaeger 12-Way	2.0m	Differential - Reflection

Small Encircling Probes

Absolute

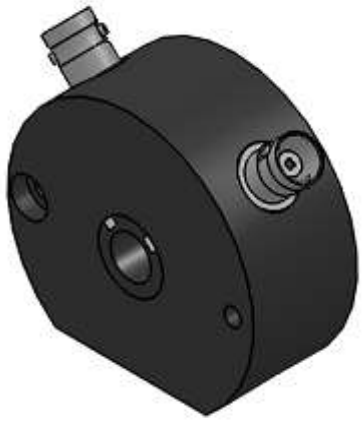

Differential (Bridge)

Application:

Absolute/Differential encircling Coil - for the inspection of tube, bar and wire. Used for the detection of surface breaking cracks and material sorting.

Probe Coding:

Examples, more available on request:

Ether NDE Part No.	Description	Ømm	Frequency Range
Probe, Encircling			
PEA050	Probe, Encircling Coil, Absolute, Dia 5.0mm	5.0	5-50kHz
PEA071	Probe, Encircling Coil, Absolute, Dia 5.0mm	7.1	5-50kHz
PED050	Probe, Encircling Coil, Differential, Dia 5.0mm	5.0	5-50kHz
PED100	Probe, Encircling Coil, Differential, Dia 5.0mm	10.0	5-50kHz

Leads to fit above probes:

Ether NDE Part No.	Description	Instrument	Connector Instrument End	Connector Probe End	Cable Length	Configuration
ALLCX-B02-015A	Lead	Ether	Lemo OO	BNC Plug	1.5m	Absolute
ALL12-B02-B02-015B	Lead	Ether	Lemo 12-Way	X2 BNC Plugs	1.5m	Bridge

VeeScan Probes – Bridge

Application:

For use with the VeeScan EC wheel inspection system, for detecting surface breaking cracks in wheels. The circular absolute probe is positioned perpendicular to the surface to ensure uniform sensitivity regardless of wheel surface profile as the probe progresses through the wheel bead seat area.

Specification:

Bridge connected absolute (integral balance load) with circular head. Recommended Frequency 200kHz option 100kHz, 500kHz and 1.5 MHz. Recommended diameter 6mm (9mm also available and narrow shaft for large wheels)

Probe Coding:

Part Number	Frequency	'D' Diameter	'A' Diameter	'B' Diameter	'X Length	Y' Length	Description
PA06-100B	100k	1/4" (6mm)	4.0	6.35	172	257	Probe, VeeScan, Head Dia 6mm, 100kHz
PA06-200B	200k	1/4" (6mm)	4.0	6.35	172	257	Probe, VeeScan, Head Dia 6mm, 200kHz
PA06-500B	500k	1/4" (6mm)	4.0	6.35	172	257	Probe, VeeScan, Head, Dia 6mm, 500kHz
PA06-002B	2.0M	1/4" (6mm)	4.0	6.35	172	257	Probe, VeeScan, Head, Dia 6mm, 2MHz
PA06-100FB	100k	1/4" (6mm)	4.0	6.35	122	207	Probe, VeeScan, Head Dia 6mm, 100kHz, Fine Shaft
PA06-200FB	200k	1/4" (6mm)	4.0	6.35	122	207	Probe, VeeScan, Head Dia 6mm, 200kHz, Fine Shaft
PA06-500FB	500k	1/4" (6mm)	4.0	6.35	122	207	Probe, VeeScan, Head, Dia 6mm, 500kHz, Fine Shaft
PA06-002FB	2.0M	1/4" (6mm)	4.0	6.35	122	207	Probe, VeeScan, Head, Dia 6mm, 2MHz, Fine Shaft
Part Number	Frequency	'D' Diameter	'A' Diameter	'B' Diameter	'X Length	Y' Length	Description
PA09-100B	100k	3/8" (9mm)	6.35	6.35	172	257	Probe, VeeScan, Head Dia 9mm, 100kHz
PA09-200B	200k	3/8" (9mm)	6.35	6.35	172	257	Probe, VeeScan, Head Dia 9mm, 200kHz
PA09-500B	500k	3/8" (9mm)	6.35	6.35	172	257	Probe, VeeScan, Head, Dia 9mm, 500kHz
PA09-002B	2.0M	3/8" (9mm)	6.35	6.35	172	257	Probe, VeeScan, Head, Dia 9mm, 2MHz
PA09-100FB	100k	3/8" (9mm)	6.35	6.35	122	207	Probe, VeeScan, Head Dia 9mm, 100kHz, Fine Shaft
PA09-200FB	200k	3/8" (9mm)	6.35	6.35	122	207	Probe, VeeScan, Head Dia 9mm, 200kHz, Fine Shaft
PA09-500FB	500k	3/8" (9mm)	6.35	6.35	122	207	Probe, VeeScan, Head, Dia 9mm, 500kHz, Fine Shaft
PA09-002FB	2.0M	3/8" (9mm)	6.35	6.35	122	207	Probe, VeeScan, Head, Dia 9mm, 2MHz, Fine Shaft

- Simply remove the "B" from the end of the above part numbers for Absolute versions used on the Hocking WheelScan.

Sliding Probes – Dual Element

PFS001 - Dual element sliding probe

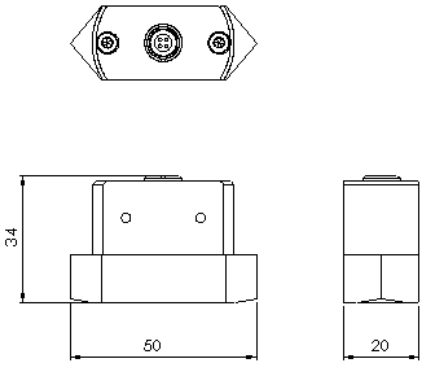

Optional
Guide - P/N: 40090

PFS002 - Dual element sliding probe

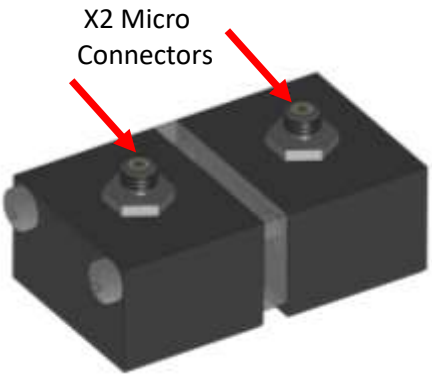

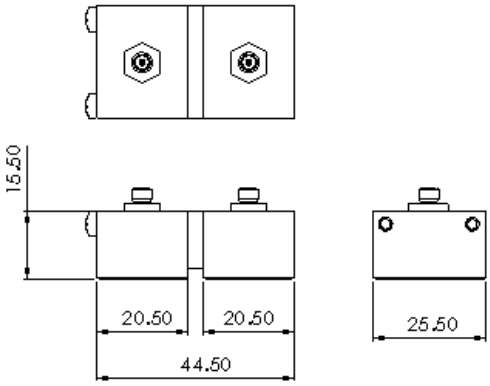

Application:

Typically used on aircraft wings (and on other similar structures) to detect cracks and corrosion on or near the surface around fasteners and in deeper layers under the skins. The above probes either slide along or over rows of fasteners.

Probe Coding:

PFS001 - Dual element sliding probe - Reflection - Lemo 4-Way - contains a transmit and receive element - 400Hz-50kHz - used on fastener head sizes 1mm and below.

PFS002 - Dual element sliding probe - Tx, Rx - contains a transmit and receive element - 100Hz-500kHz - Comes with 1.5, 2.5 and 3.5mm wide Lens.

Leads to fit above probes:

Ether NDE Part No.	Description	Instrument	Connector Instrument End	Connector Probe End	Cable Length	Configuration
ALL12-L04-015R	Lead	WeldCheck/ AeroCheck/ Vantage/ETi/ Hocking	Lemo 12-Way	Lemo 4-Way	1.5m	Reflection
ALL12-M02-M02-015AR	Lead	WeldCheck/ AeroCheck/ Vantage/ETi/ Hocking	Lemo 12-Way	X2 micro Plug	1.5m	Transmit & Receive

Low Frequency Fastener Inspection Probes

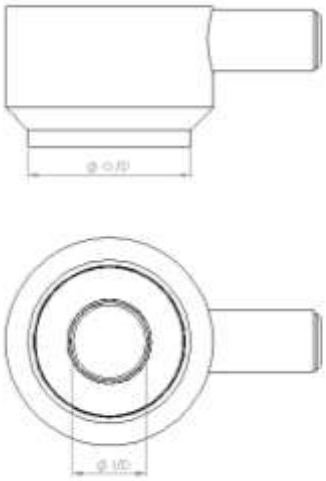

Application:

Typically used on aircraft wings (and on other similar structures) to detect cracks and corrosion around fasteners without requiring removal of the fastener.

Probe Coding:

Ether NDE Part No.	Frequency Range	I/D Diameter	Description
PD0516	250Hz-40kHz	5	Probe, Ring, (Donut) 250Hz - 40kHz, I/D 5mm O/D 16mm
PD0619	500Hz - 40kHz	6	Probe, Ring, (Donut) 500Hz - 40kHz, I/D 6mm O/D 19mm
PD06719	250Hz-40kHz	6.7	Probe, Ring, (Donut) 250Hz - 40kHz, I/D 6.7mm O/D 19mm
PD0822	250Hz-40kHz	8	Probe, Ring, (Donut) 250Hz - 40kHz, I/D 8mm O/D 22mm
PD08419	250Hz-40kHz	8.4	Probe, Ring, (Donut) 250Hz - 40kHz, I/D 8.4mm O/D 19mm
PD0922	250Hz-40kHz	9	Probe, Ring, (Donut) 250Hz - 40kHz, I/D 09mm O/D 22mm
PD09719	250Hz-40kHz	9.7	Probe, Ring, (Donut) 250Hz - 40kHz, I/D 9.7mm O/D 19mm
PD1022	250Hz-40kHz	10	Probe, Ring, (Donut) 250Hz - 40kHz, I/D 10mm O/D 22mm
PD1122	250Hz-40kHz	11	Probe, Ring, (Donut) 250Hz - 40kHz, I/D 11mm O/D 22mm
PD1225	80Hz-50kHz	12	Probe, Ring, (Donut) 80Hz - 50kHz, I/D 12mm O/D 25mm
PD1329	80Hz-50kHz	13	Probe, Ring, (Donut) 80Hz - 50kHz, I/D 13mm O/D 29mm
PD1332	80Hz-50kHz	13	Probe, Ring, (Donut) 80Hz - 50kHz, I/D 13mm O/D 32mm
PD1429	80Hz-50kHz	14	Probe, Ring, (Donut) 80Hz - 50kHz, I/D 14mm O/D 29mm
PD1531	80Hz-50kHz	15	Probe, Ring, (Donut) 80Hz - 50kHz, I/D 15mm O/D 31mm
PD1629	80Hz-50kHz	16	Probe, Ring, (Donut) 80Hz - 50kHz, I/D 16mm O/D 29mm
PD1640	80Hz-50kHz	16	Probe, Ring, (Donut) 80Hz - 50kHz, I/D 16mm O/D 40mm
PD2038	80Hz-50kHz	20	Probe, Ring, (Donut) 80Hz - 50kHz, I/D 20mm O/D 38mm
PD2844	80Hz-50kHz	28	Probe, Ring, (Donut) 80Hz - 50kHz, I/D 28mm O/D 52mm

Leads to fit above probes:

Ether NDE Part No.	Description	Instrument	Connector Instrument End	Connector Probe End	Cable Length	Configuration
ALL12-L04-015R	Lead	WeldCheck/ AeroCheck/ ETi	Lemo 12-Way	Lemo 4-Way	1.5m	Reflection

Rail Inspection Probes

PT001

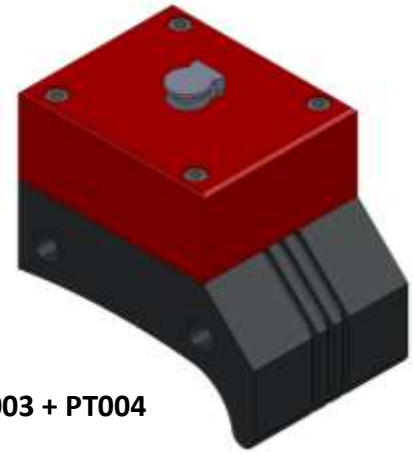

PT003 + PT004

PT010

Application:

Detecting surface breaking cracks in rail and rolling stock.

Probe Coding:

Ether NDE Part No.	Frequency Range	Description
PT001	20kHz-500kHz	Probe, WideScan, Flat General Purpose, Single Coil, Reflection, 20kHz to 500kHz, Lemo 4-Way
PT003	20kHz-500kHz	Probe, WideScan, Rail Head RT-1, 50mm Wide, Single Coil, Reflection, 20kHz to 500kHz, Lemo 4-Way Socket
PT004	20kHz-500kHz	Probe, WideScan, Rail Head RT-1, 50mm Wide, Dual Coil, Reflection, 20kHz to 500kHz, x2 Lemo 4-Way Sockets
PT010	20kHz-500kHz	Probe, WideScan, Flat, 3.5" wide x 1" long x 1" tall, Reflection, 20kHz to 500kHz,Lemo Water Tight 4-Way socket

Leads to fit above probes:

Ether NDE Part No.	Description	Instrument	Connector Instrument End	Connector Probe End	Cable Length	Configuration
ALL12-L04-015R	Lead	WeldCheck/ AeroCheck/ ETi	Lemo 12-Way	Lemo 4-Way	1.5m	Reflection

SigmaCheck Conductivity Probe

PSIG001 – Dia 13.00mm – Operating Frequency 60, 120, 240 and 480kHz

PSIG002 – Dia 8.00mm – Operating Frequency 60, 120, 240 and 480kHz

Application:

For use with the SigmaCheck eddy current conductivity meter, conductivity is widely used to indicate material type and determine the state of heat treatment. In order to give accurate readings the SigmaCheck uses a three-point reference method. The first measurement with the probe in the air and then two further measurements are required which span the range of interest. The SigmaCheck is supplied with a detachable reference piece with two standards that span the range of commonly used metals.

Part Number:

Ether NDE Part No.	Description	Instrument
PSIG001A	Probe, Conductivity, 60,120,240 and 480kHz, Dia 13.00mm, Straight, Lemo 5-Way	SigmaCheck2
PSIG002A	Probe, Conductivity, 60,120,240 and 480kHz, Dia 8.00mm, Straight, Lemo 5-Way	SigmaCheck2

Note: Each probe is supplied with an SD card, which holds the probes characteristics; this is then inserted into the SigmaCheck being used.

Leads to fit above probes:

Ether NDE Part No.	Description	Instrument
ALL05-L05-012-SIGA	Accessory, Lead, 5-Way Lemo to 5-Way Lemo, 1.2m (SigmaCheck2)	SigmaCheck2

AeroCheck+ Conductivity Probe

Lemo 7 –Way

Probe: PCON001

Will only work on an AeroCheck+ with lead ALL12-L07-007-CON

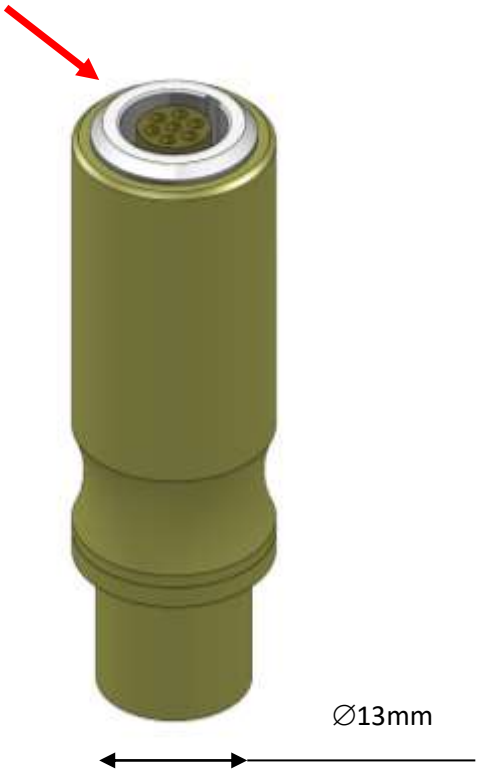

Application:

For use with the AeroCheck+ eddy current conductivity meter. The probe has an internal memory that stores the probe characteristics for calculating conductivity. Only one test frequency can be applied to a probe.

Part Number:

Ether NDE Part No.	Description
PCON001	Probe, Conductivity, 60kHz, Dia 13.00mm, Straight, Lemo 7-Way (AeroCheck Plus)

Leads to fit above probes:

Ether NDE Part No.	Description
ALL12-L07-007-CON	# Accessory, Lead, 12-Way Lemo to 7-Way Lemo, 0.7m, Conductivity (To fit AeroCheck Plus Conductivity Probe)

Rotating Drive

ARD002 – Small Rotating Drive

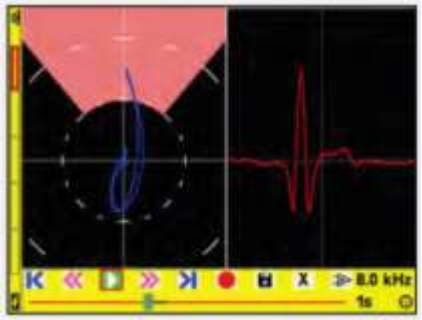

Application:

Eddy current rotary inspections of fastener holes and countersinks are performed routinely in the Aircraft Maintenance Industry and now the method is also being used increasingly in the power generation industry for the inspection of bolt-holes on wind turbines. High-speed surface inspection is also another area of increasing usage.

- Hole Inspection
- Countersink Inspection
- Surface Inspection

The **Mercury Rotary Drive** is perfect for tight spaces and is designed and manufactured in-house. It uses our standard rotating probe range as shown on page 30.

The Mercury Rotary Drive is compatible with:

- AeroCheck
- Vantage G2
- ETi-200
- Hocking Phasec 2 & 3
- Industry Standard 4 Pin Fischer Rotary Probes

Part Number:

Ether NDE Part No.	Description	Specification
ARD002	Accessory, Rotating Drive, Small, Lemo 12-Way. (MERCURY)	Rotation Speed - 3000, 2700, 2400, 2100, 1800, 1500, 1200, 1020, 840 and 600 rpm Dimensions - Height: 80.9mm, Width: 25mm, Length: 34.5mm Weight – 300grams

Leads to fit above probes:

Ether NDE Part No.	Description	Instrument
ALL12-L12-020M	Accessory, Lead, Lemo 12-Way - Lemo 12-Way, 2.0m (Rotating Drive)	AeroCheck/Vantage G2/ETi/Hocking

Test Blocks

General Purpose with Slots

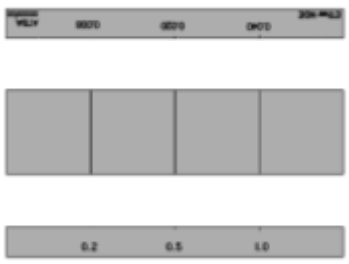

Application:

Test blocks – general purpose with 0.2 (0.008”), 0.5 (0.020”) and 1.0mm (0.040”) slots to enable correct calibration.

Test Block Coding:

Ether NDE Part No.	Description	Material
Accessory, Test Block,		
ATBF	Accessory. Test Block, Ferrous (Steel EN1A), 0.2, 0.5, 1.0mm slots	Ferrous (Steel EN1A)
ATBA	Accessory. Test Block, Aluminium Alloy 7075-T6, 0.2, 0.5, 1.0mm slots	Aluminium Alloy 7075-T6
ATBT	Accessory. Test Block, Titanium 6A14V, 0.2, 0.5, 1.0mm slots	Titanium 6A14V
ATBS	Accessory. Test Block, Stainless Steel 304, 0.2, 0.5, 1.0mm slots (AUSTENITIC)	Stainless Steel
ATBS316	Accessory. Test Block, Stainless Steel 316, 0.2, 0.5, 1.0mm slots	Stainless Steel **316**

Weld Probe Test Block

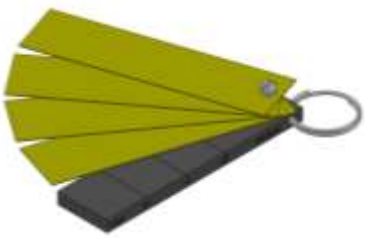

Application:

Weld probe test block – coating thickness calibration standard with 0.5 (0.02”), 1.0 (0.04”) and 2.0mm (0.08”) slots including 4 x 0.5mm (0.02”) shims, used in conjunction with broad band (paint) probe PUB100k to set sensitivity levels before weld inspection.

Test Block Coding:

Ether NDE Part No.	Description	Material
ATBW	Accessory. Test Block, Weld Probe, Ferrous (Steel EN1A) + 4 x 0.5mm Shims, 0.5, 1.0, 2.0mm slots	Ferrous (Steel EN1A) + 4 x 0.5mm Shims
ATBWDUP	Accessory. Test Block, Weld Probe, Duplex, 2205 4 x 0.5mm Shims, 0.5, 1.0, 2.0mm slots	Duplex + 4 x 0.5mm Shims

Weld Probe Demo Crack Specimen

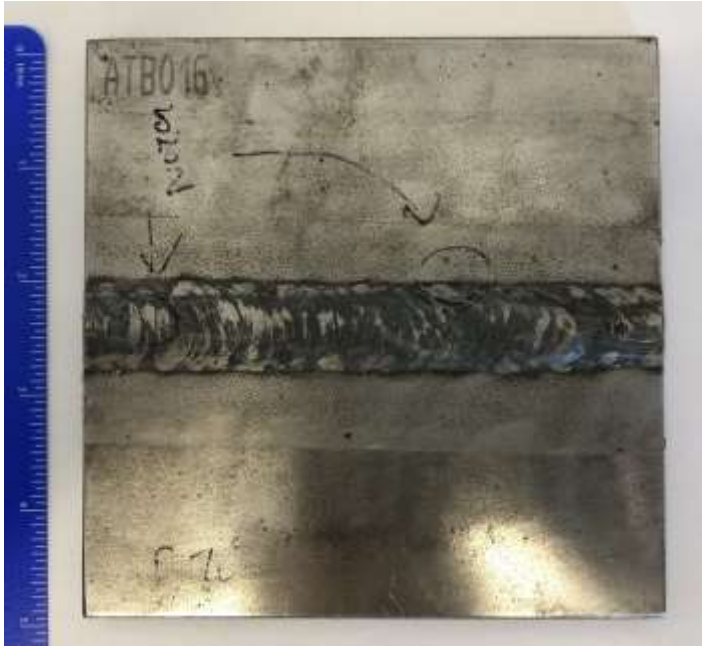

Ether NDE Part No.	Description
ATB016	Test Block WeldCheck Demo Crack Specimen - Plate with two cracks, Type A and C - Toe and Cap Plates are 5" x5", 1/4" thick with false ground crown. Standard crack size 1/4" Long x 0.040" deep.

Rotating Probe Test Block

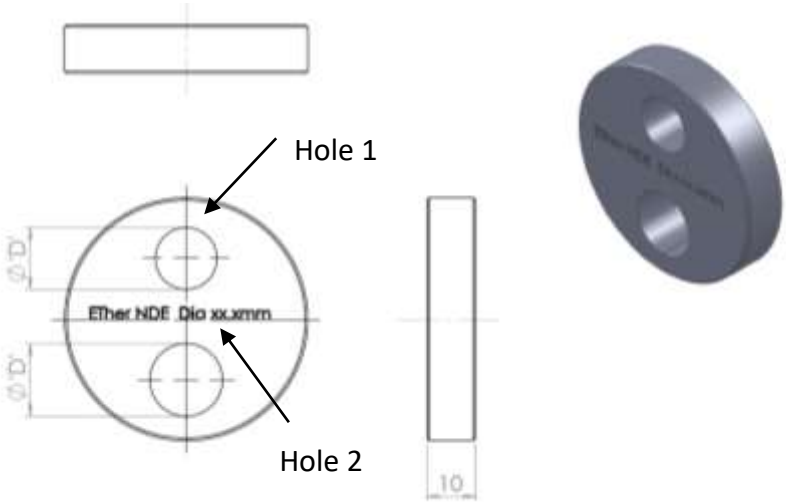

Application:

Rotating probe test blocks – available in a number of materials with a large variety of defect types, used to enable correct calibration of rotating probes.

Test Block Coding:

Ether NDE Part No.	Description	Material	Hole ∅	Hole 1	Hole 2
Accessory, Test Block, Rotating, Material Type (A, F , T or S), Hole Diameter (mm) xxx, Defect Type in Hole 2 X					
ATBRAxxxX	Test Block, Rotating Probe	Aluminium Alloy 7075-T6	**Hole ∅ xxx** **Example:** **12.7mm = 127**	Defect Free Hole	Defect Type X (Standard) Side Drilled Hole (∅ 1mm) Corner Notch (0.030” x 0.030”) Through Notch (0.020” deep x 0.004” Wide)
ATBRFxxxX	Test Block, Rotating Probe	Ferrous (Steel EN1A)			
ATBRTxxxX	Test Block, Rotating Probe	Titanium 6A14V			

Rotating Probe Test Blocks – Multi Hole

Test Block Coding:

Ether NDE Part No.	Description	Material
ATB005	Accessory, Test Block, Rotating probe, Total 12 holes; Holes 3/16", 1/4", 5/16", 3/8", 7/16", 1/2" 6 sound holes and 6 holes with Flaws	Aluminium 7075-T6
ATB004	Accessory, Test Block, Large Rotating Probe, 1/8" up to 1" with 0.5mm side drilled holes + Slots 0.2, 0.5 and 1mm deep.	Aluminium 7075-T6

Split Conical Calibration Blocks

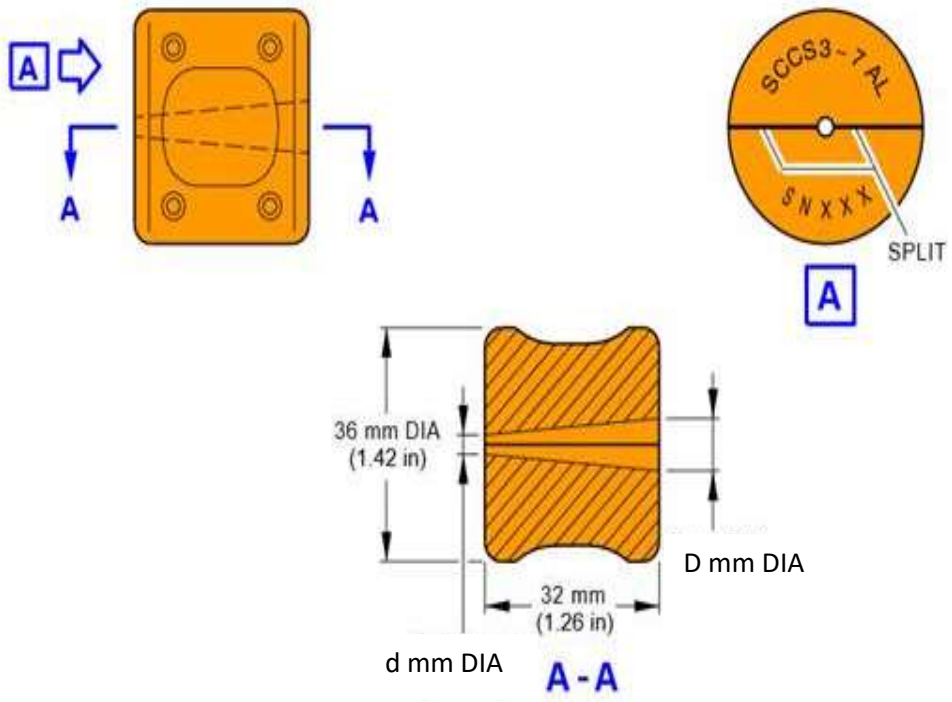

Application:

Used to calibrate eddy current rotating probes before inspection.

Test Block Coding:

Ether NDE Part No.	Description	Airbus Part Number	Dia d mm	Dia D mm
	Titanium			
ATB-SC-T-03-07	Accessory, Test Block, Split Conical, Titanium, 3-7mm	SCCS3-7TI	3	7
ATB-SC-T-07-14	Accessory, Test Block, Split Conical, Titanium, 7-14mm	SCCS7-14TI	7	14
ATB-SC-T-14-21	Accessory, Test Block, Split Conical, Titanium, 14-21mm	SCCS14-21TI	14	21
ATB-SC-T-21-28	Accessory, Test Block, Split Conical, Titanium, 21-28mm	SCCS21-28TI	21	28
ATB-SC-T-28-40	Accessory, Test Block, Split Conical, Titanium, 28-40mm	SCCS28-40TI	28	40
	Aluminium			
ATB-SC-A-03-07	Accessory, Test Block, Split Conical, Aluminium, 3-7mm	SCCS3-7AL	3	7
ATB-SC-A-07-14	Accessory, Test Block, Split Conical, Aluminium, 7-14mm	SCCS7-14AL	7	14
ATB-SC-A-14-21	Accessory, Test Block, Split Conical, Aluminium, 14-21mm	SCCS14-21AL	14	21
ATB-SC-A-21-28	Accessory, Test Block, Split Conical, Aluminium, 21-28mm	SCCS21-28AL	21	28
ATB-SC-A-28-40	Accessory, Test Block, Split Conical, Aluminium, 28-40mm	SCCS28-40AL	28	40
	Ferrous			
ATB-SC-FE-03-07	Accessory, Test Block, Split Conical, Ferrous, 3-7mm	SCCS3-7FE	3	7
ATB-SC-FE-07-14	Accessory, Test Block, Split Conical, Ferrous, 7-14mm	SCCS7-14FE	7	14
ATB-SC-FE-14-21	Accessory, Test Block, Split Conical, Ferrous, 14-21mm	SCCS14-21FE	14	21
ATB-SC-FE-21-28	Accessory, Test Block, Split Conical, Ferrous, 21-28mm	SCCS21-28FE	21	28
ATB-SC-FE-28-40	Accessory, Test Block, Split Conical, Ferrous, 28-40mm	SCCS28-40FE	28	40

Surface Probe Test Block

Test Block Coding:

Ether NDE Part No.	Description	Material
ATB001	Accessory, Test Block, Aluminium 7075-T6, 1.6mm Thick, x4 Flat Bottom Holes 75%(1.2mm), 50%(0.8mm), 25%(0.4mm), 2.5%(0.2mm), Deep.	Aluminium 7075-T6

Bond-Testing Pitch-Cath Probe Delrin Coupon

Top View

Bottom View

Test Block Coding:

Ether NDE Part No.	Description	Material
ATB023	Accessory, Test Block, Pitch-Catch Probes, Delrin Coupon	Delrin

Bond Testing Modified Boeing ST8871D Composite Test Block

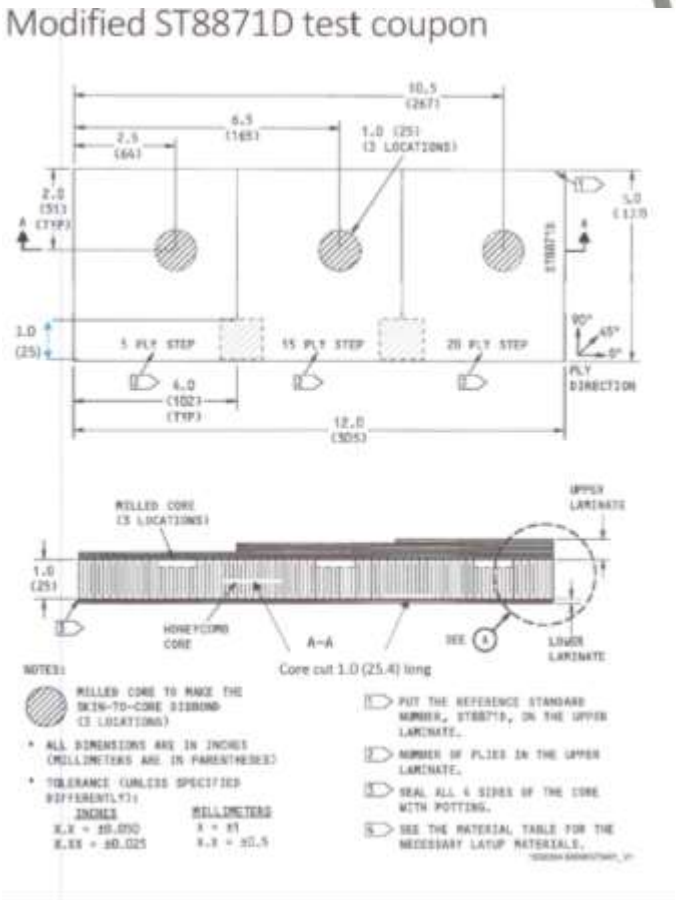

Test Block Coding:

Ether NDE Part No.	Description
ATB022	Accessory, Test Block, Composite, Modified Boeing ST8871D Compsote Test Coupon (With x2 additional core cuts x1 Mid Layer and x1 Bottom Layer, each 25.4mm Long) - Not certified

Conductivity Test Blocks

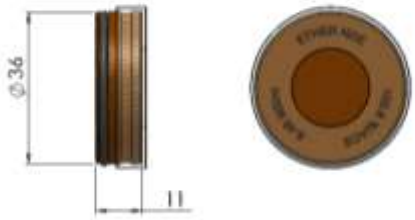

Application:

Used as a reference in the application of electrical conductivity measurement of non-ferrous metals, ideal for both laboratory and field use. Blocks are supplied with calibration certificates.

Calibration:

- Blocks are calibrated at 20degC, at a frequency of 60kHz
- The limits of permissible errors are ± 1%IACS of value for values of 35%IACS and lower, ± 0.35%IACS for measured values between 35%IACS and 62%IACS and ± 1%IACS for measured values 62%IACS and above.
- The conductivity of each reference standard is determined for the central area of diameter 15mm of front face by comparison with similar material, the conductivity of which has been determined in terms of traceable electrical standards.

Test Block Coding:

Ether NDE Part No.	Material	% IACS (Value Range)	Siemens/m (Value Range)
ATBC-COPPER	Copper	(99.9 - 102.5)	(57.9 - 59.5)
ATBC-ALU1200	Aluminium Alloy, 1200-H4	(57.2 - 60.5)	(33.2 - 35.1)
ATBC-ALU6082	Aluminium Alloy, 6082-T6	(45.1 - 49.0)	(26.2 -28.4)
ATBC-ALU6061	Aluminium Alloy, 6061-T6	(40.5 – 45.0)	(23.4 -26.1)
ATBC-ALU2014A-T6	Aluminium Alloy, 2014A-T6	(34.7 – 40.3)	(20.1 - 23.4)
ATBC-ALU7075	Aluminium Alloy, 7075-T6	(30.0 - 34.1)	(17.4 -19.8)
ATBC-ALU5083	Aluminium Alloy, 5083	(26.6 - 30.0)	(15.4 - 17.4)
ATBC-BRASS	Brass, CZ 121	(23.3 - 26.6)	(13.5 - 15.4)
ATBC-PBRONZE	Phosphor Bronze	(13.0 – 18.0)	(7.5 – 10.4)
ATBC-NICSILVER	Nickel Silver, LC1291	(9.0 - 9.9)	(5.2 - 5.7)
ATBC-STST303S	Stainless Steel, 303 S	(2.1 - 2.5)	(1.2 - 1.4)
ATBC-TITANIUM	Titanium, 6AL-4V	(1.0 - 1.1)	(0.6 -0.7)

Note:

Conductivity values vary, for current stock values please contact sales@ethernde.com. Precise values will be shown on each block.

Other blocks available on request.

Probe Leads

Notes:

Leads come as standard in a 1.5m cable length, other lengths available on request.

Ether NDE WeldCheck, AeroCheck, Vantage G2, ETi (Lemo Coaxial/Lemo OO - Absolute):

Ether NDE Part No.	Description	Instrument	Connector Instrument End	Connector Probe End	Cable Length	Configuration
ALLCX-M02-015A	Lead	Ether	Lemo OO	Micro Plug	1.5m	Absolute
ALLCX-B02-015A	Lead	Ether	Lemo OO	BNC Plug	1.5m	Absolute

Ether NDE WeldCheck, AeroCheck, Vantage G2, ETi - Hocking Phasec2200/D60/D62, Phasec 3d, Phasec 2d, Phasec 2s, Locator 3, (Lemo 12-Way):

Ether NDE Part No.	Description	Instrument	Connector Instrument End	Connector Probe End	Cable Length	Configuration
ALL12-L04-015R	Lead	Ether/Hocking	Lemo 12-Way	Lemo 4-Way	1.5m	Reflection
ALL12-L04-015B	Lead	Ether/Hocking	Lemo 12-Way	Lemo 4-Way	1.5m	Bridge
ALL12-M02-015A	Lead	Ether/Hocking	Lemo 12-Way	Micro Plug	1.5m	Absolute
ALL12-B02-015A	Lead	Ether/Hocking	Lemo 12-Way	BNC Plug	1.5m	Absolute
ALL12-B02-B02-015A	Lead	Ether/Hocking	Lemo 12-Way	BNC Plug x2	1.5m	Absolute
ALL12-L05-015F	Lead	Ether/Hocking	Lemo 12-Way	Lemo 5-Way	1.5m	FastScan

Hocking Phasec/Quick Check (Jaeger 6-Way):

Ether NDE Part No.	Description	Instrument	Connector Instrument End	Connector Probe End	Cable Length	Configuration
ALJ06-L04-015R	Lead	Hocking	Jaeger 6-Way	Lemo 4-Way	1.5m	Reflection
ALJ06-L04-015B	Lead	Hocking	Jaeger 6-Way	Lemo 4-Way	1.5m	Bridge

BNC (Cable Type RG174):

Ether NDE Part No.	Description	Instrument	Connector Instrument End	Connector Probe End	Cable Length	Configuration
ALB02-B02-015A	Lead	Various	BNC Plug	BNC Plug	1.5m	Absolute
ALB02-M02-015A	Lead	Various	BNC Plug	Micro Plug	1.5m	Absolute

Hocking Locator 2, Locator 2s (Lemo 7-Way):

Ether NDE Part No.	Description	Instrument	Connector Instrument End	Connector Probe End	Cable Length	Configuration
ALL07-L04-015R	Lead	Hocking	Lemo 7-Way	Lemo 4-Way	1.5m	Reflection
ALL07-L04-015B	Lead	Hocking	Lemo 7-Way	Lemo 4-Way	1.5m	Bridge
ALL07-M02-015A	Lead	Hocking	Lemo 7-Way	Micro Plug	1.5m	Absolute
ALL07-B02-015A	Lead	Hocking	Lemo 7-Way	BNC	1.5m	Absolute
ALL07-B02-B02-015A	Lead	Hocking	Lemo 7-Way	BNC Plug x2	1.5m	Absolute

Probe Adapters

Notes:

Adapters come as standard in a 150mm length, other lengths available on request.

Ether NDE Part No.	Description	Instrument	Connector Instrument End	Connector Probe End	Cable Length	Configuration
AAL12P-L07S	Adapter	Ether/Hocking	Lemo 12-Way	Lemo 7-Way	150mm	All
AAL12-J06P	Adapter	Ether/Hocking	Lemo 12-Way	Jaeger 6-Way	150mm	All
AAL12-Z04SB	Adapter	Ether/Hocking	Lemo 12-Way	Amphenol	150mm	Bridge
AAL12-Z04SR	Adapter	Ether/Hocking	Lemo 12-Way	Amphenol	150mm	Reflection
AAL07P-L12S	Adapter	Hocking	Lemo 7-Way	Lemo 12-Way	150mm	All

AALCX-B02S - Accessory, Adapter, Lemo OO to BNC Jack (Short) (Lemo 00 to BNC)

AAB02-LCXS - Accessory, Adapter, BNC Socket to Lemo 00 Socket (Short) (BNC to Lemo OO)

AAL12P-B02S - Accessory, Adapter, 12-Way Lemo to BNC Socket (Fixed 61mm Long)

Probe Tape

Application:

Used as probe tip protectors.

Probe Tape Coding:

Ether NDE Part No.	Description
AW001	PTFE Tape 7mm Wide x 1m
AW003	Butterfly PTFE Tape, pack of 30

Balance Loads

Application:

Used with absolute probes on impedance plane instruments.

Ether NDE Part No.	Inductance	Frequency Range (50ohm)	Connector
ABAL006	1.3uH	2MHz – 10MHz	BNC
ABAL002	8.2uH	350kHz – 3MHz	BNC
ABAL500	47uH	50kHz – 500kHz	BNC
ABAL200	120uH	20kHz – 200kHz	BNC

Probe and Instrument Cases

Probe Case:

Ether NDE Part No.	Description
AC002	Accessory, Deluxe Probe Case PHDC1

Protective/Splash Proof Instrument Case:

Ether NDE Part No.	Description
AWEL005	Accessory, Instrument Soft Carry Case (To Fit: WeldCheck /AeroCheck)
AAER004	Accessory, Instrument Soft Carry Case (To Fit: WeldCheck2/WeldCheck+, AeroCheck2/AeroCheck+)

Instrument Soft Carry Case:

Ether NDE Part No.	Description
AC006	Accessory, Instrument Soft Carry Case (To Fit: WeldCheck/AeroCheck/AeroCheck+)

Instrument Hard Carry Case:

Ether NDE Part No.	Description
AWEL004	Accessory, Accessory, Hard Transit Case with Padded Dividers Internal Size 432 x 280 x 153mm (To Fit: WeldCheck – AeroCheck – AeroCheck+)

Other Instrument Accessory's:

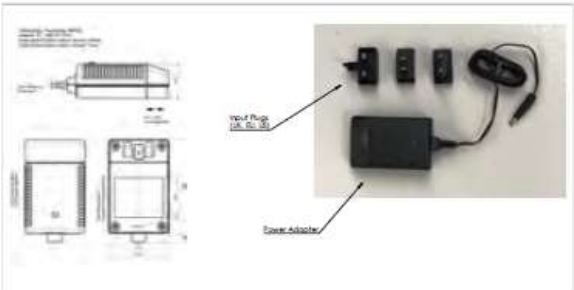

AWEL002 AeroCheck, Power Adapter + Input Plugs (UK, EU, US & Australia)

AWEL003 Adjustable Shoulder Strap, Padded with Quick-Release Clips

AWEL008 Accessory, In-Car 12V Power Adapter (Weld/AeroCheck) (12V, 5.5 x 2.5mm Plug)

AAER002 Accessory, PELIE STORM iM2300 Case with foam

Probe Kits

Weld Probe Kit to fit WeldCheck/AeroCheck Range:

Ether NDE Part No.	Description
Kit Part Number: KAWEL001	
Includes:	
PWM100S00	Probe, Weld, Dia 16.00mm (Medium) 100kHz, Straight, Disconnect
PUB100k	Probe, Unshielded, Broad Band, 100k (35kHz-250kHz), BNC
ATBW	Accessory, Test Block, Weld Probe, Ferrous (Steel EN1A) + 4 x 0.5mm Shims, 0.5, 1.0, 2.0mm slots
ALL12-L04-015B	Accessory, Lead, Lemo 12-Way - Lemo 4-Way, 1.5m (Bridge)
ALLCX-B02-015A	Accessory, Lead. Lemo 00 to BNC, 1.5m (Vantage)
AW003	Accessory, Butterfly PTFE Tape (Pack of 30)
AC002	Accessory, Deluxe Probe Case PHDC1

Weld Probe Advanced Kit to fit WeldCheck/AeroCheck Range:

Ether NDE Part No.	Description
Kit Part Number: KAWEL002	
Includes:	
PWS100S000	Probe, Weld, Dia 11.00mm (Small) 100kHz, Straight, Disconnect
PWM100M000	Probe, Weld, Dia 16.00mm (Medium) 100kHz, Straight, Disconnect
PUB100k	Probe, Unshielded, Broad Band, 100k (35kHz-250kHz), BNC
ATB016	Test Block WeldCheck Demo Crack Specimen - Plate with two cracks, Type A and C - Toe and Cap Plates are 4" x4", 1/4" thick with false ground crown. Standard crack size 1/4" Long x 0.040" deep.
ATBW	Accessory, Test Block, Weld Probe, Ferrous (Steel EN1A) + 4 x 0.5mm Shims, 0.5, 1.0, 2.0mm slots
ALL12-L04-015B	Accessory, Lead, Lemo 12-Way - Lemo 4-Way, 1.5m (Bridge)
ALLCX-B02-015A	Accessory, Lead. Lemo 00 to BNC, 1.5m
AW003	Accessory, Butterfly PTFE Tape (Pack of 30)
AC007	Accessory, Hard Peli 1120 Carry Case

Surface Probe Kit to fit WeldCheck/AeroCheck Range:

Ether NDE Part No.	Description
Kit Part Number: KASUR001	
Includes:	
PU500PSFE/NFE	Probe, Unshielded, 500kHz, Fe/NFe, Plastic Handle, Straight, 100mm Long
PS002PS028-114N	Probe, Shielded, 2MHz, Plastic Handle,Straight, 28mm Tip Length (Total Length 114mm, 4.5") (Straight Shank)
PS500PD064-114N	Probe, Shielded, 500kHz, Plastic Handle, Double Crank, 6.4 (0.25") Tip Length (Total Length 114mm, 4.5") (15deg Crank, 90deg tip Shank)
PS002PD064-114N	Probe, Shielded, 2MHz, Plastic Handle, Double Crank, 6.4 (0.25") Tip Length (Total Length 114mm, 4.5") (15deg Crank, 90deg tip Shank)
PK065002NFE	Probe, Knife, 65 deg, 2MHz, NFe, Unshielded
ALLCX-M02-015A	Accessory, Lead, Lemo 00 to Microdot, 1.5m (Vantage/ETi)
ATBF	Accessory. Test Block, Ferrous (Steel EN1A), 0.2, 0.5, 1.0mm slots
ATBA	Accessory. Test Block, Aluminium Alloy 7075-T6, 0.2, 0.5, 1.0mm slots
AW003	Accessory, Butterfly PTFE Tape (Pack of 30)
AC002	Accessory, Deluxe Probe Case PHDC1

Sub Surface Probe Kit to fit WeldCheck/AeroCheck Range:

Ether NDE Part No.	Description
Kit Part Number: KASUBS001	
Includes:	
PUS16	Probe, Surface, Straight, Dia 16mm, 300Hz - 100KHz, Plastic, Lemo 4-Way
PUR11	Probe, Surface, Right Angled, Dia 11mm, 300Hz - 100KHz, Plastic, Lemo 4-Way
ALL12-L04-015R	Accessory, Lead, Lemo 12-Way - Lemo 4-Way, 1.5m (Reflection)
ATB001	Accessory, Test Block, Aluminium 7075-T6, 1.6mm Thick, x4 Flat Bottom Holes 75%(1.2mm), 50%(0.8mm), 25%(0.4mm), 12.5%(0.2mm), Deep.

Rotary Drive Kit to fit AeroCheck – AeroCheck2 – AeroCheck+:

Ether NDE Part No.	Description
Kit Part Number: KAROT001	
Includes:	
ARD002	Accessory, Rotating Drive, Small, Lemo 12-Way. (MERCURY)
ALL12-L12-020M	Accessory, Lead, Lemo 12-Way - Lemo 12-Way, 2.0m (Rotating Drive)
AC002	Accessory, Deluxe Probe Case PHDC1

NIST Conductivity Probe Kit to fit WeldCheck+ – AeroCheck+:

(Please note that this kit only works on a WeldCheck+ and AeroCheck+)

Ether NDE Part No.	Description
Kit Part Number: KACON001 - KIT, Conductivity Inspection **- NIST** - Std Dia 13mm Probe (To fit AeroCheck Plus)	
Includes:	
PCON001	Probe, Conductivity, 60kHz, Dia 13.00mm, Straight, Lemo 7-Way (AeroCheck Plus)
ASIG014	Accessory, Dual Conductivity Reference Standards, Nominal Values 9% and 59% IACS (SigmaCheck) **NIST** VALUES
ALL12-L07-012-CON	Accessory, Lead, 12-Way Lemo to 7-Way Lemo, 1.2m, Conductivity (To fit AeroCheck Plus Conductivity Probe)
40516	SKIRT - Conductivity Probe (AeroCheck Plus)
B3061S	SCREW - M3 THUMB SCREW
40517	REFERENCE HOLDER - Dual Condustivity Standard (Thermal Bridge for Stability)
APCON001	QUICK REFERNCE CARD - GUIDE TO USING CONDUCTIVITY PROBE PCON001

NPL Conductivity Probe Kit to fit WeldCheck+ – AeroCheck+:

(Please note that this kit only works on a WeldCheck+ and AeroCheck+)

Ether NDE Part No.	Description
Kit Part Number: KACON002 - KIT, Conductivity Inspection **- NPL** - Std Dia 13mm Probe (To fit AeroCheck Plus)	
Includes:	
PCON001	Probe, Conductivity, 60kHz, Dia 13.00mm, Straight, Lemo 7-Way (AeroCheck Plus)
ASIG015	Accessory, Dual Conductivity Reference Standards, Nominal Values 9% and 59% IACS (SigmaCheck) **NPL** VALUES
ALL12-L07-012-CON	Accessory, Lead, 12-Way Lemo to 7-Way Lemo, 1.2m, Conductivity (To fit AeroCheck Plus Conductivity Probe)
40516	SKIRT - Conductivity Probe (AeroCheck Plus)
B3061S	SCREW - M3 THUMB SCREW
40517	REFERENCE HOLDER - Dual Condustivity Standard (Thermal Bridge for Stability)
APCON001	QUICK REFERNCE CARD - GUIDE TO USING CONDUCTIVITY PROBE PCON001

Ether NDE Eddy Current Product Range and Features Explained

Instrument	Kit Part Number	Frequency	Guides	Live Loop & Trace	Protective Boot & Integrated Strap	Record and replay of up to 2.5 minutes of data	32GB of removeable Data Storage	Automatic Lift-Off Gain Compensation	C-Scan Capability	Motorised scanner control	Rotary	Conductivity	Bondtesting (Pitch Catch)
WeldCheck2	KIWEL003	Single	✓	✓	✓	✓	✓						
WeldCheck+	KIWEL002	Dual	✓	✓	✓	✓	✓	✓				✓	
AeroCheck2	KIAER003	Single	✓	✓	✓	✓	✓				✓		
AeroCheck+	KIAER002	Dual	✓	✓	✓	✓	✓				✓	✓	
ETherCheck	KIETH001	Dual	✓	✓	✓	✓	✓				✓	✓	✓
PhaseCheck	KIPHAS001	Dual	✓	✓	✓	✓	✓		✓	✓	✓	✓	

Guides – allows the user to display a slide show that can be created easily with commonly used desktop software. The benefit of this feature is that instructions, tutorials and procedures for an inspection can be added to the instrument very quickly and the NDT inspector can easily switch between the inspection itself and the "Guides" while performing a live test.

Loop - is a convenient way of capturing a short live repetitive signal and then optimizing the instrument settings through real time adjustments of the Phase, Gain, Balance, Filters and Display Configuration in order to simplify the task of optimising the parameters. The "Loop" function is excellent for calibration set up especially for setting the filters for Rotary and Dual Frequency mix.

Trace - The trace function allows a reference waveform to be stored on the screen and appears along with the graticule behind the live spot. This allows the operator to readily compare the live data with the reference calibration.

Protective Boot & Integrated Strap – has enhanced durability through a fully-fitted, custom-designed outer "protective boot" and integral hand-strap for even greater ruggedness and easier grip.

Auto Lift-Off Gain Compensation – Feature to add automatic paint thickness compensation using absolute and bridge mode simultaneously on the weld probe.

Removable Storage – microSD 2GB (500 saved settings, 500 screen shots) microSD 32GB (10,000 saved settings, 10, 000 screen shots).

C-Scan and Motorised Scanner control – The PhaseCheck offers 2 axis incremental encoder input and USB scanner control. This means that C-Scan Images can be recorded and the XY data stored for the image for post-test anlaysis.

Splash Case - Please note that the splash case for the new WeldCheck2, WeldCheck+, AeroCheck2, AeroCheck+ needs to be AAER004.

Also Available

- Pencil Probes - Shielded Metal Handle
- Turbine Blade Inspection Probes
- Differential Scanning Probes
- Special Probes

Special Probe Design Check List

1. Customer

Name

Company

Address

Email

Phone

2. Flaw to be detected

Flaw type

Material

Conductivity

Thickness

Mm

Magnetic

Yes	No

Test

Surface	Sub-surface

Flaw Orientation

Random	Longitudinal	Transverse

Surface condition

Ground	Drawn	Machined	As caste	Roughness	Other >>	

Defect Length

mm

Defect Depth

mm

Defect width

mm

Depth of penetration

mm

3. Instrument to be used

4. **Probe type**

Details of similar probe used

Changes Required

Operation Mode

Absolute	Differential	Bridge	Reflection

Mode of use

Surface	ID (Bobbin)	OD	Weld	Saddle	Other >>	

Detection width

mm

Area to be inspected

Attach/Sketch drawing

Access Limitations

Attach/Sketch drawing

Adverse test environment

Temperature		Surface condition				
	C	Painted	Corrosion	Grease/Oil	Other >>	

Sample components available		With flaws		Without flaws	
Yes	No	Yes	No	Yes	No

Available from;

Ether NDE,
Endeavour House,
Unit 18 Brick Knoll Park,
St Albans,
Hertfordshire,
AL1 5UG.
UK

☎ +44 (0) 01727 648050
sales@ethernde.com
www.ethernde.com